Assembly instructions
Instructiuni de montaj

PRODUCT:Bedroom ADAM – Bedside Table Right 04
PRODUS: Dormitor ADAM – Noptiera Dreapta 04

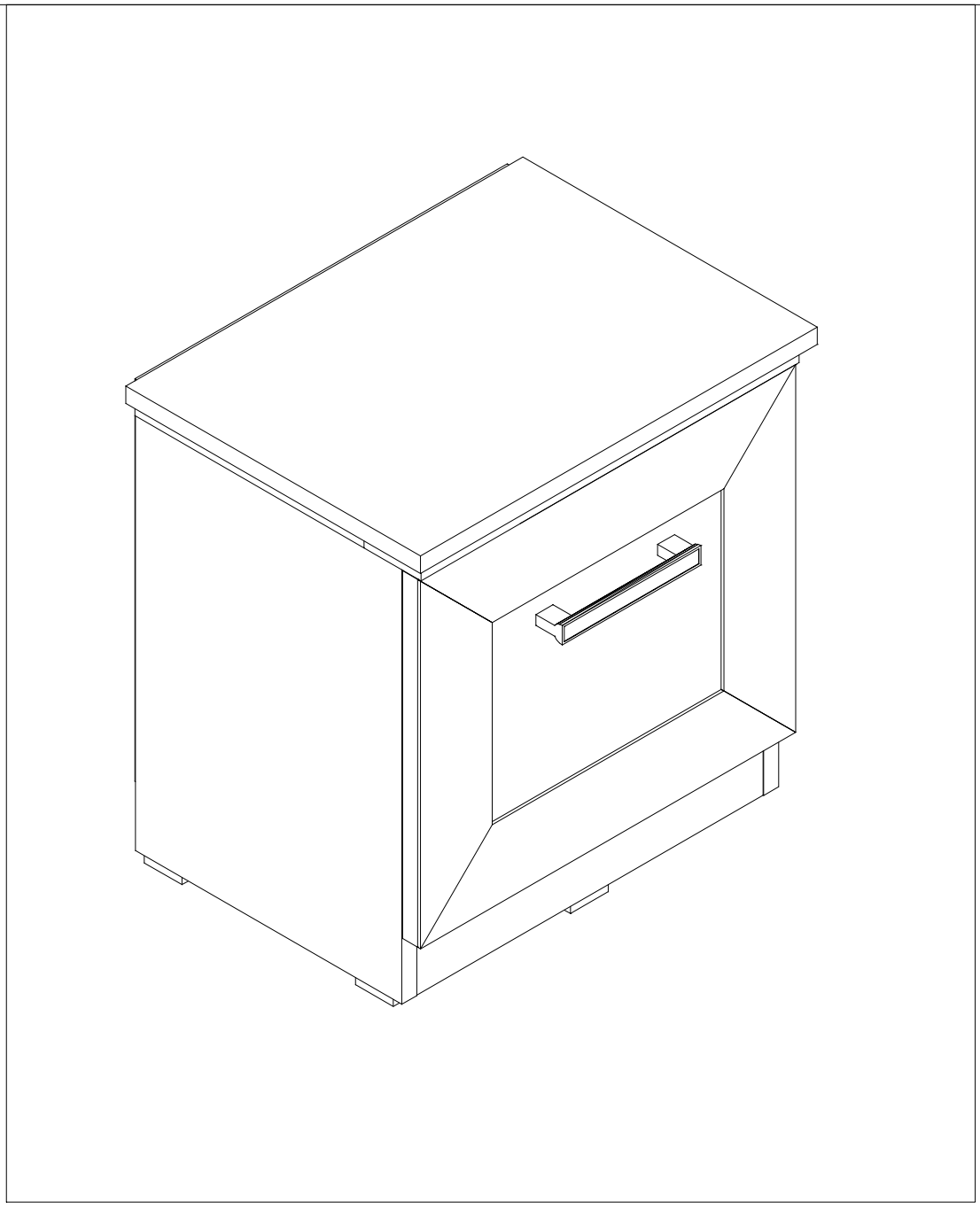

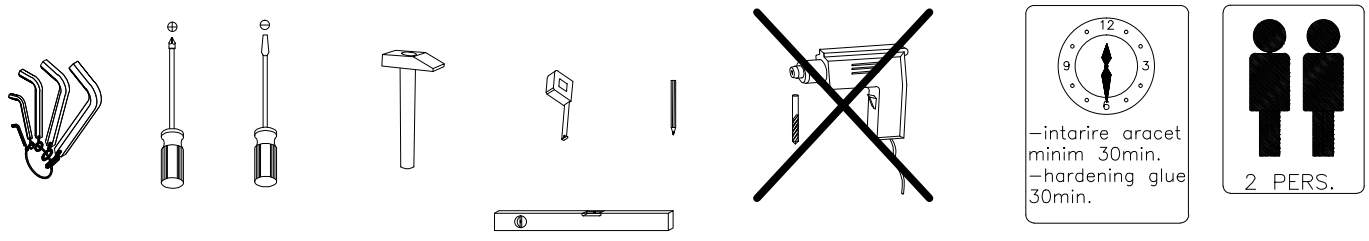

ENG Dear customer,

– As a furniture producer we would like to inform you that a wall fixing furniture can be good only if the connection between fixing material (plugs) and the wall is better. For the suspended items check the wall and use only apropriate type of dowels (brick, BCA, plasterboard,etc.) purchased from a specialty store.
–Assembler is ultimately responsible for a fixed wall. Installation and laying of electrical items will be made only by qualified personnel and authorized.
– Follow the description and specification of Charge assembly instructions – in case overload that may occur due to children playing, because people, material or due to other factors – we assume no liability as a manufacturer of furniture.
–O perfect functionality of the furniture is assured only if the settlement this adjusts the horizontal and vertical. Only after that will adjust the doors.
– All screws and removable connection elements will be checked and tightened after 5 to 6 weeks to ensure safety o final fixation.
– Do not use abrasive cleansers
– If not follow the instructions on the use, maintenance or installation, if the products or changes, if changes or used parts that do not meet original pieces, then lose any warranty or claim responsibility of the manufacturer of furniture.

Incarcari maxime pentru polite in Kg: Maximum weight in Kg Shelf							
Lungime Length	Grosime PAL melaminat Thick chipboard mm	16	18	22	25	28	Sticla Glass 5 / 6/ 8
0 ≤ 400		8 kg	8 kg	8 kg	10 kg	10 kg	Lungime Length >600=5Kg.
401 ≤ 600		6 kg	6 kg	6 kg	6 kg	6 kg	
601 ≤ 800		5 kg	5 kg	5 kg	5 kg	5 kg	Lungime Length >1000=2Kg.
801 ≤ 1000		3 kg	3 kg	3 kg	3 kg	3 kg	

RO Stimate client,

In calitate de producator de mobila am dori sa va informam ca o fixare a mobilei de perete poate fi buna doar daca legatura dintre materialul de fixare (dibluri) si perete este buna. In cazul corpurilor suspendate verificati peretele si folositi doar dibluri corspunzatoare tipului de perete (caramida, BCA, rigips,etc.) achizitionate dintr–un magazin de specialitate. In definitiv montatorul este raspunzator de fixarea de perete.
– Montarea si pozarea articolelor electrice se va efectua doar de catre personal calificat si autorizat.
– Respectati descrierea si specificatiile de incarcare din instructiunile de montaj – in caz de supraincarcare ce poate sa apara datorita copiilor care se joaca, datorita persoanelor, materialului sau datorita altor factori – nu ne asumam nici o raspundere ca producator de mobila.
– O functionalitate perfecta a mobilei este asigurata doar in cazul in care la asezare, aceasta se regleaza pe orizontala si verticala. Doar dupa aceasta se vor regla usile.
– Toate suruburile si elementele de imbinare demontabila vor trebui verificate si stranse dupa 5 pana la 6 saptamani pentru a se asigura o siguranta definitiva a fixarii.
– Nu folositi agenti de curatire abrazivi
– In cazul in care nu se respecta instructiunile de utilizare, de deservire sau de montaj, daca se efectueaza modificari ale produselor, daca se schimba piese sau se folosesc piese care nu corespund pieselor originale, atunci se pierde orice garantie sau pretentie de responsabilitate din partea producatorului de mobila.

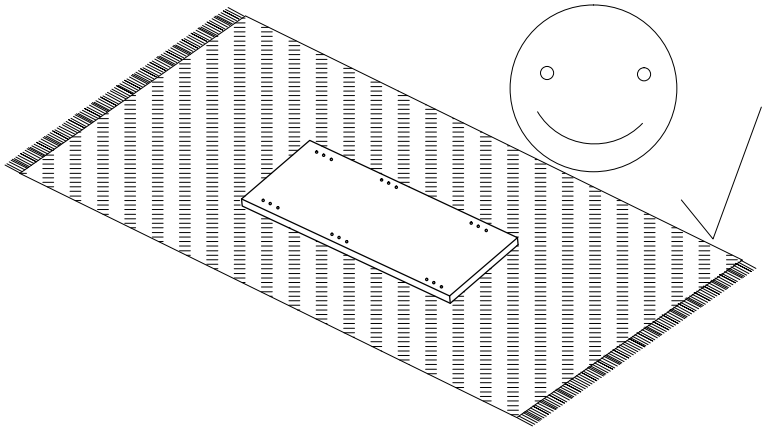

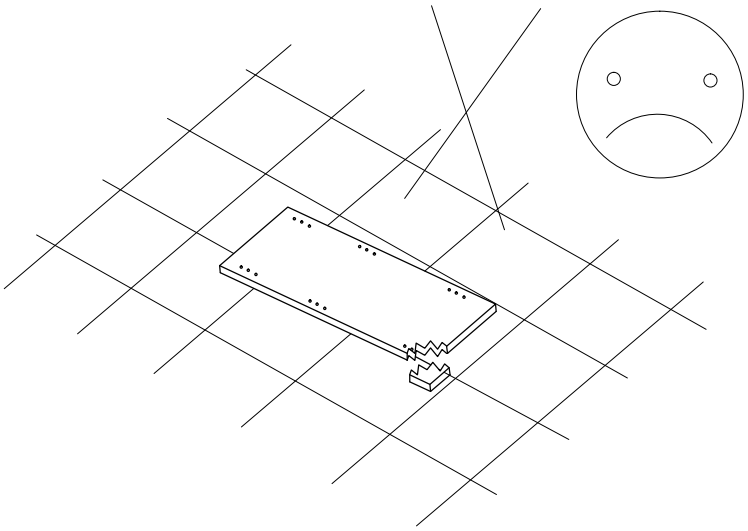

400X282.5X16

0401

400X282.5X16

0402

421X312.5X16

0403

368X282.5X16

0404

368X240.5X16

0405

398X338X20

0406

395X370X3

401X60.5X16

0407

2X243X60.5X16

0408

368X60X16

0409

T-01

D-001

D-002

E-50

B-01

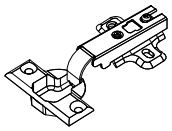

M-29

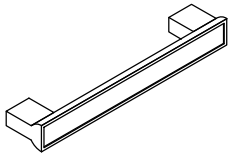

S4-27

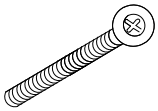

PI-01

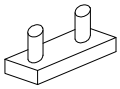

S-001

HEX

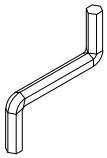

D-003

AR

S1-30

ø3.5x30

S1-16

ø3.5x16

Caracteristici tehnice produs

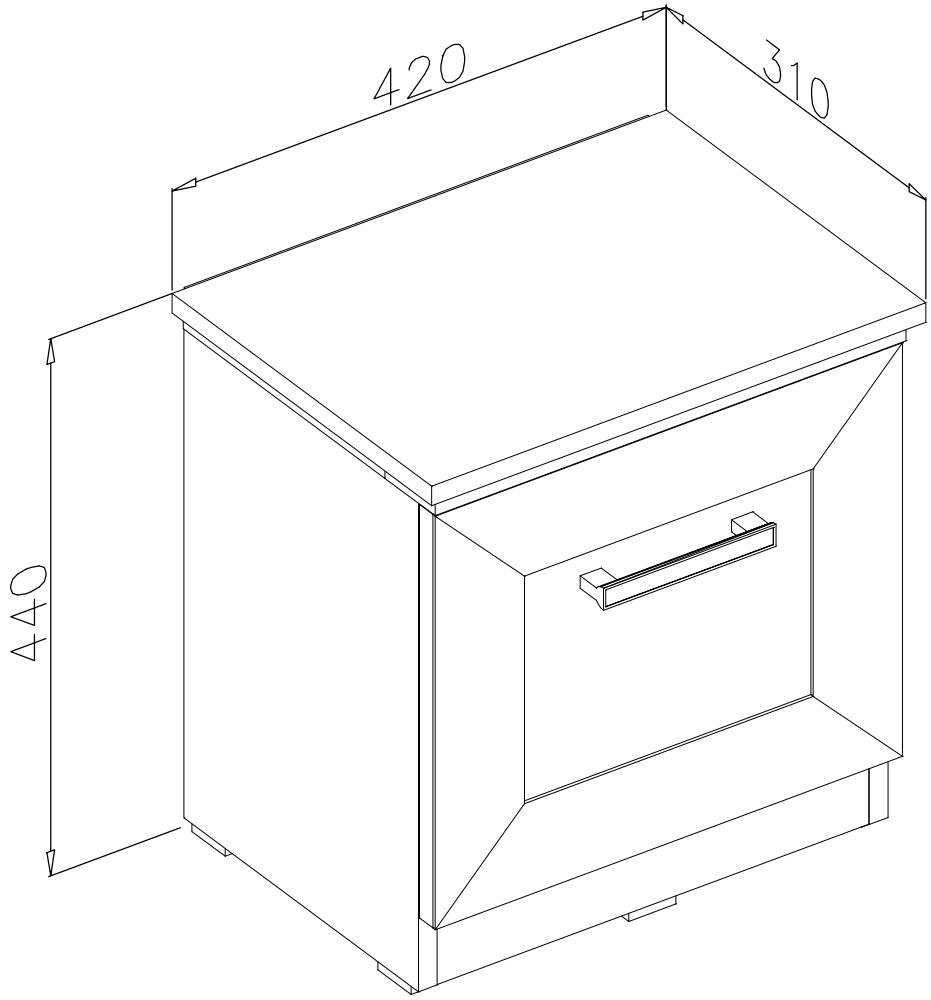

Materiale:
- Placi din aschii de lemn (PAL), meleminate de grosime = 16 mm
- Placi din fibre de lemn de inalta densitate (HDF) de grosime = 3 mm
- Front PAL cu profil MDF
- Cant ABS 0.5 mm
- Picior baza plastic
- Balamale aruncatoare
- Manere din material plastic
- Elemente de imbinare din lemn si metalice

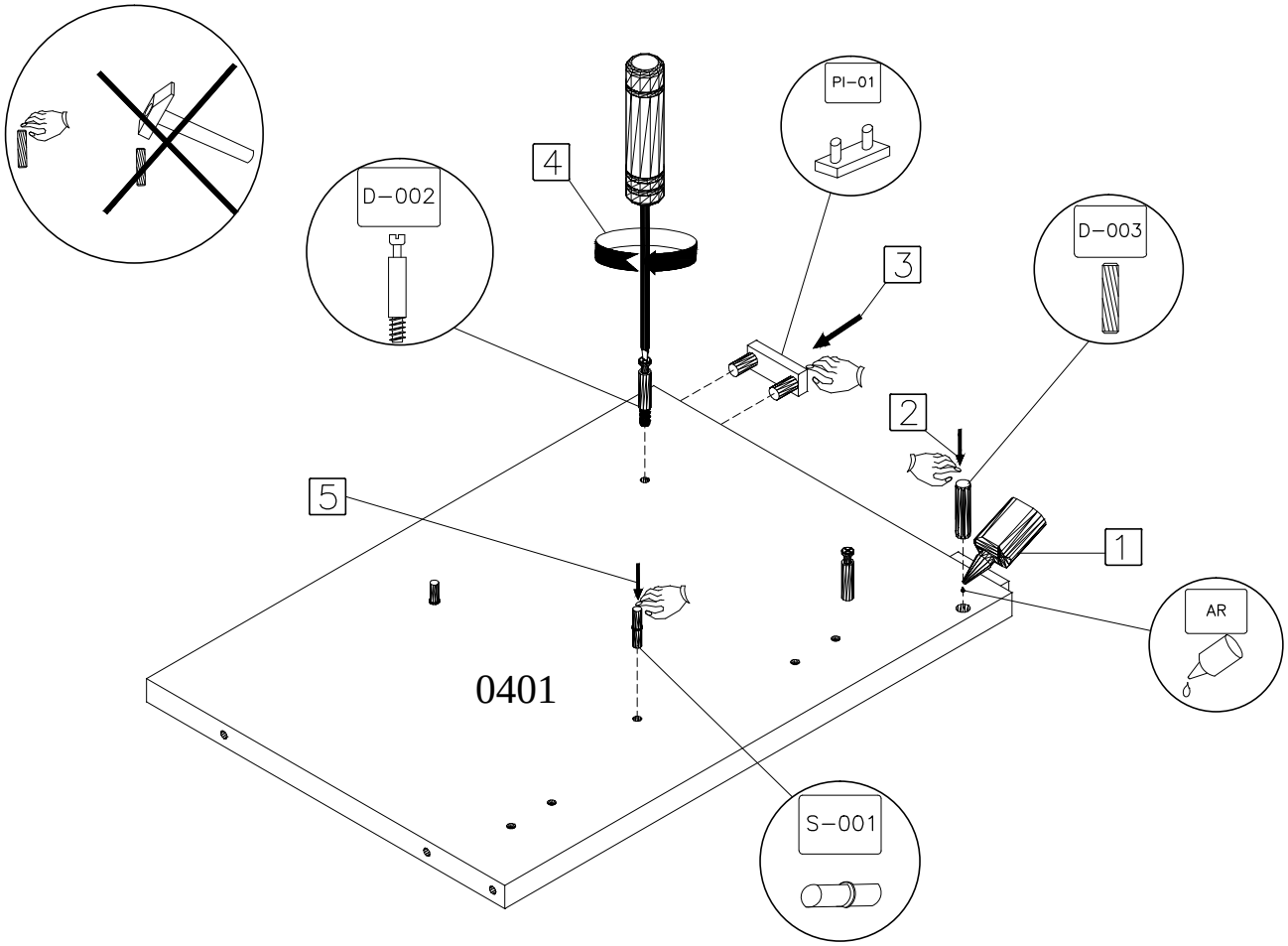
PI-01
D-002
D-003
4
3
2
5
1
AR
0401
S-001

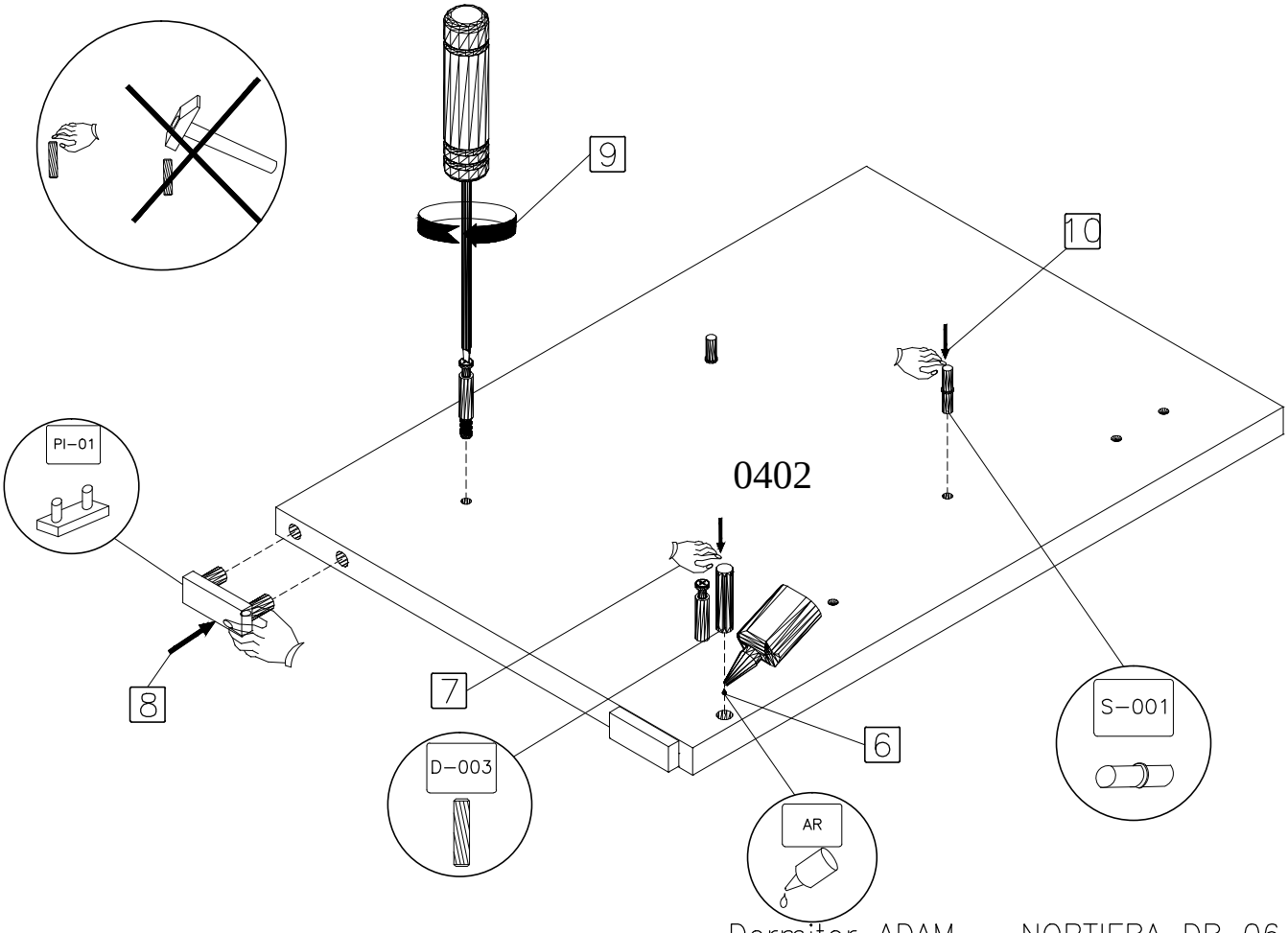
9
10
PI-01
0402
8
7
6
S-001
D-003
AR

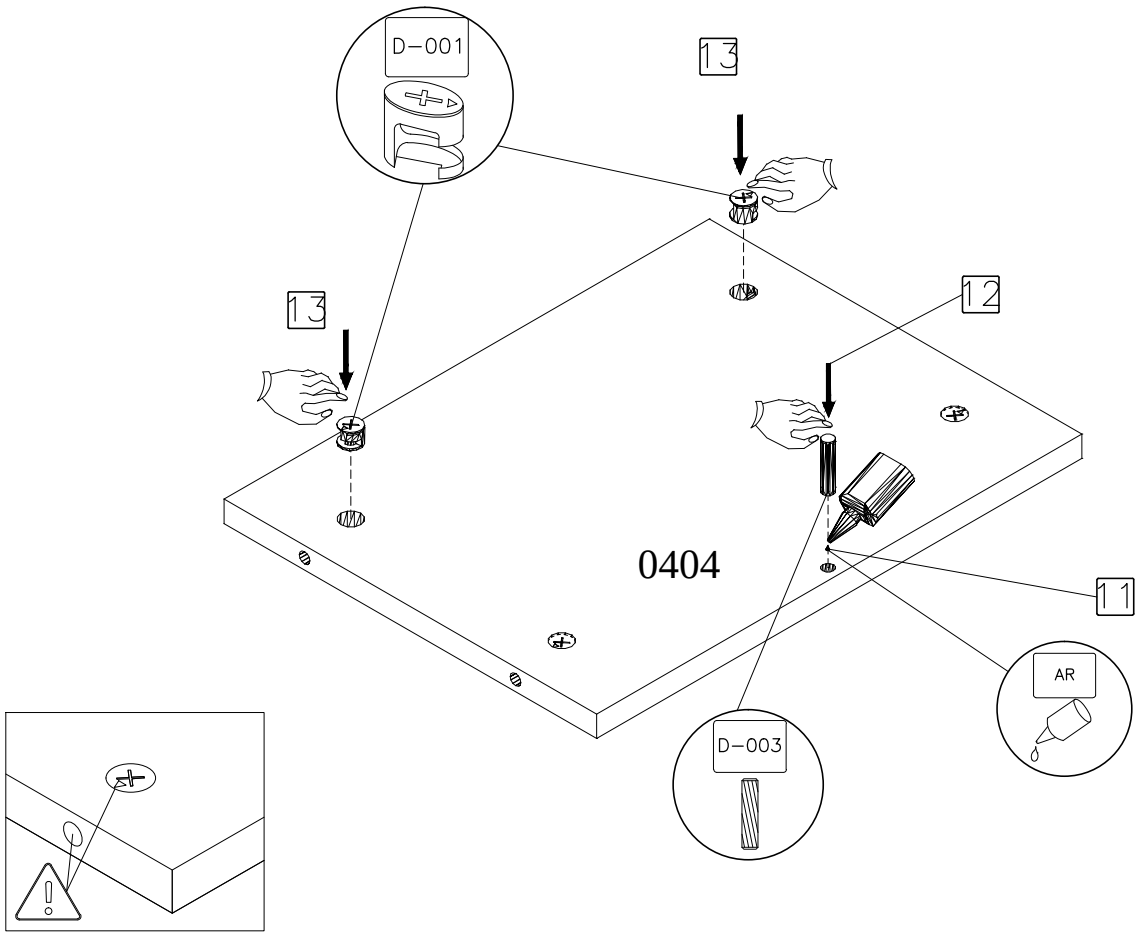
D-001
13
13
12
0404
11
AR
D-003

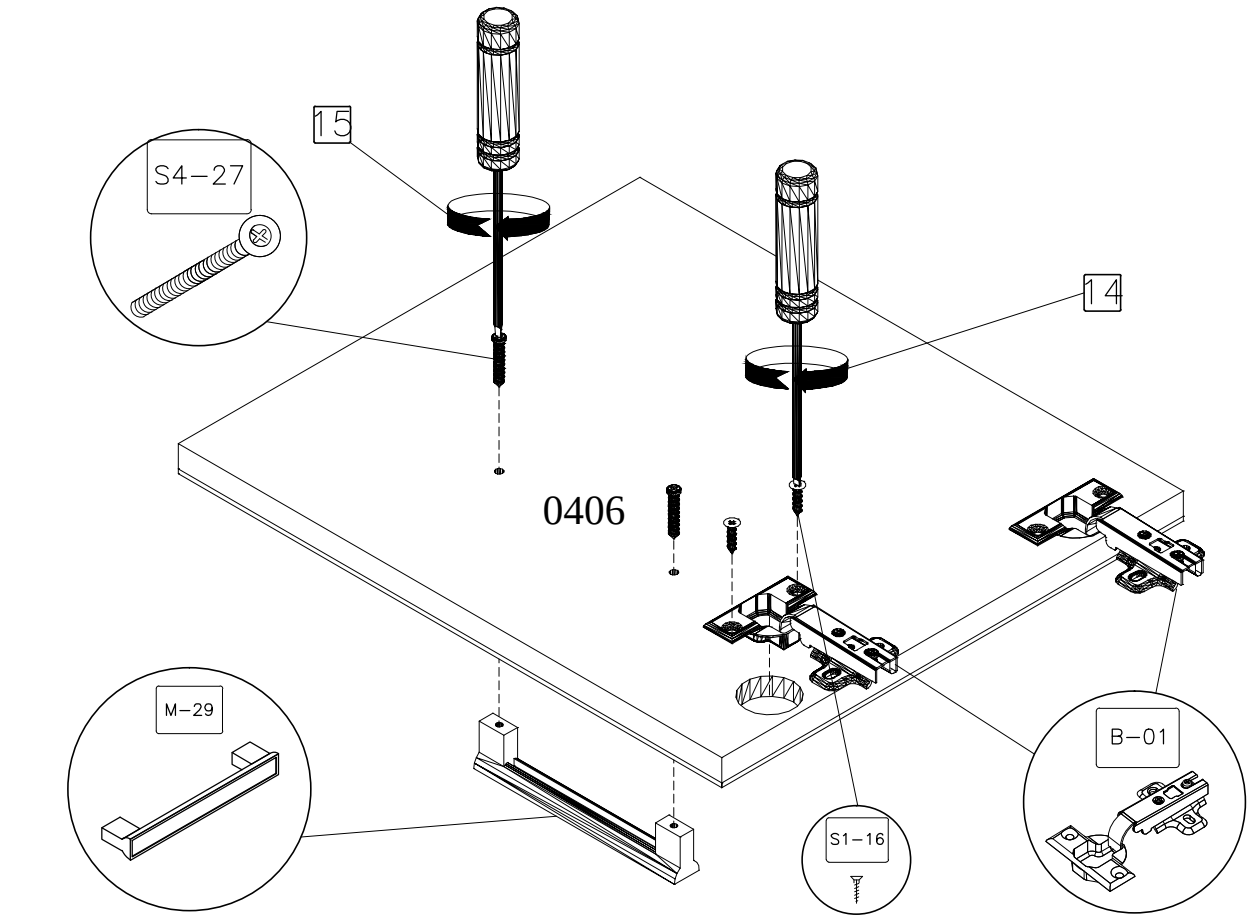
15
S4-27
14
0406
M-29
B-01
S1-16

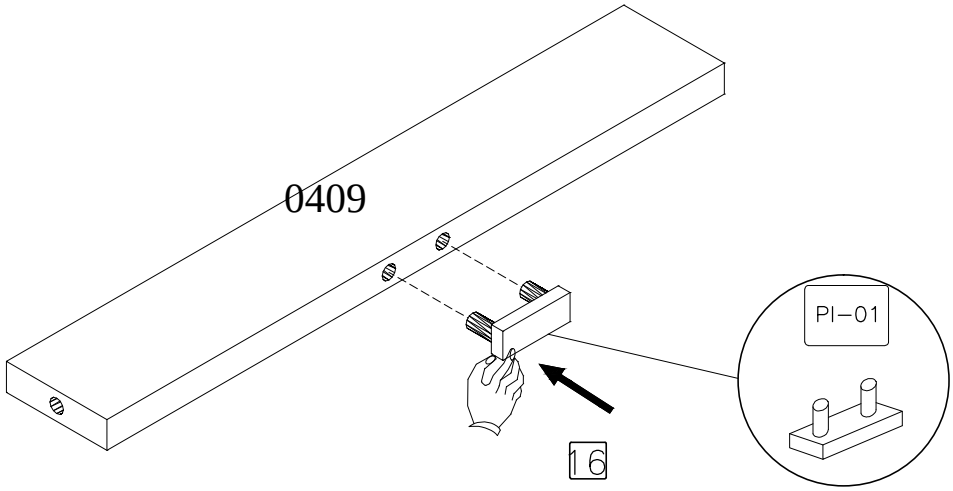
0409
PI–01
16

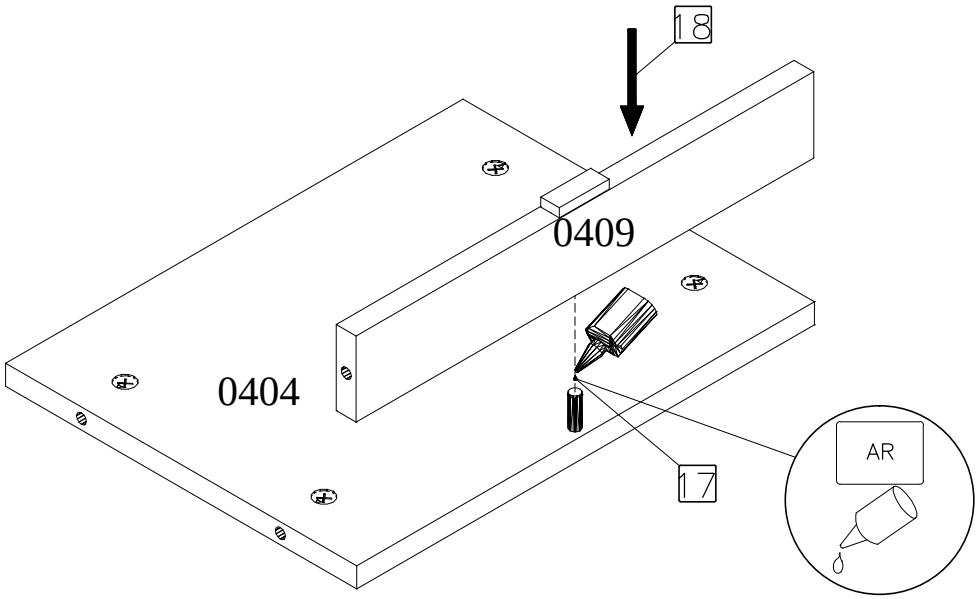
18
0409
0404
AR
17

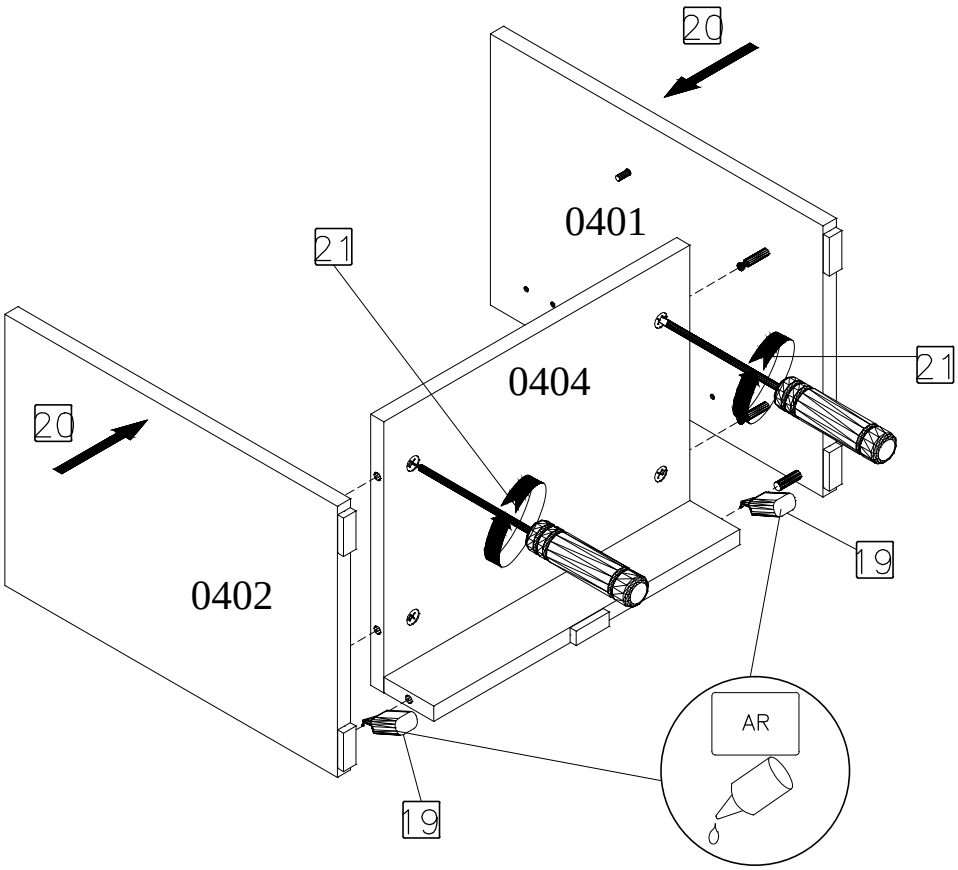
20
0401
21
0404
21
20
19
0402
AR
19

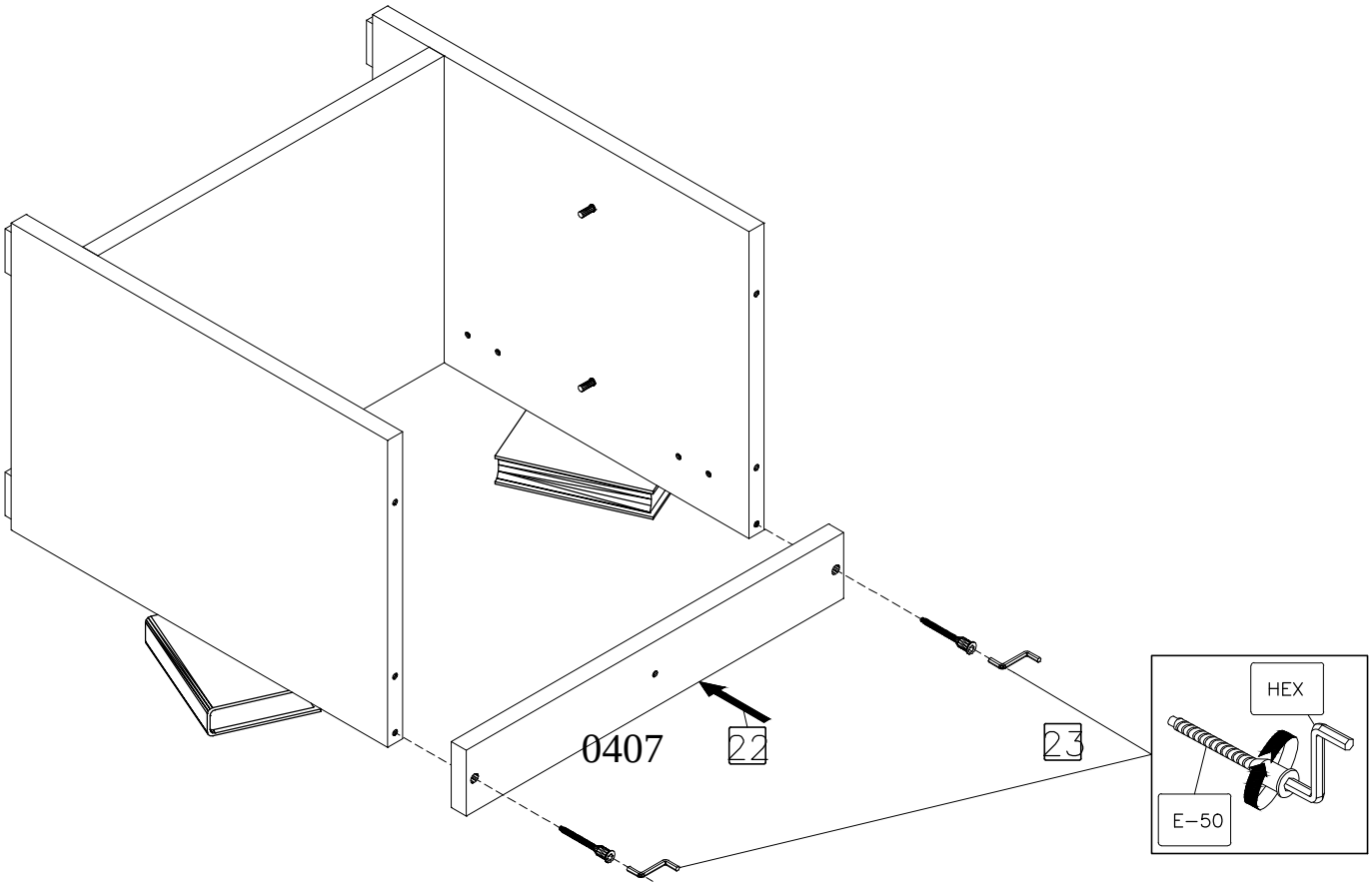
0407
22
23
HEX
E–50

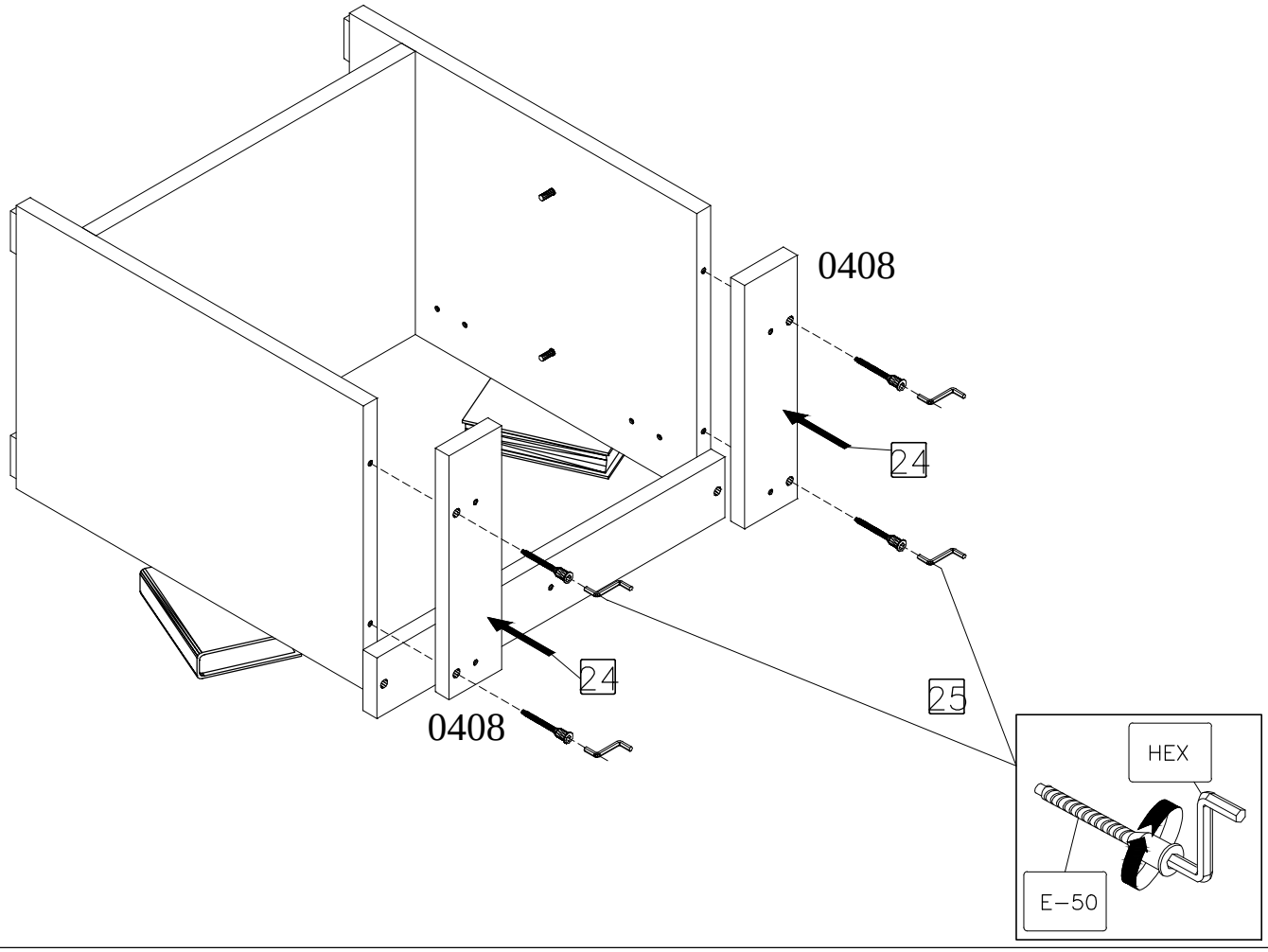
0408
24
24
0408
25
HEX
E–50

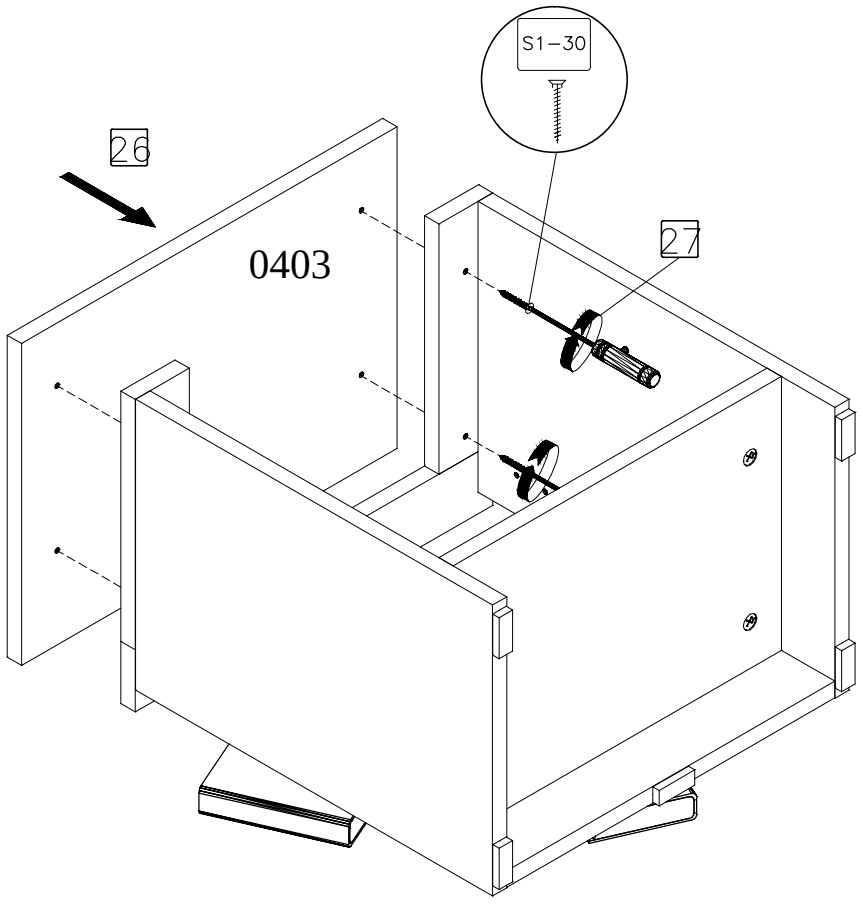
S1–30
26
0403
27

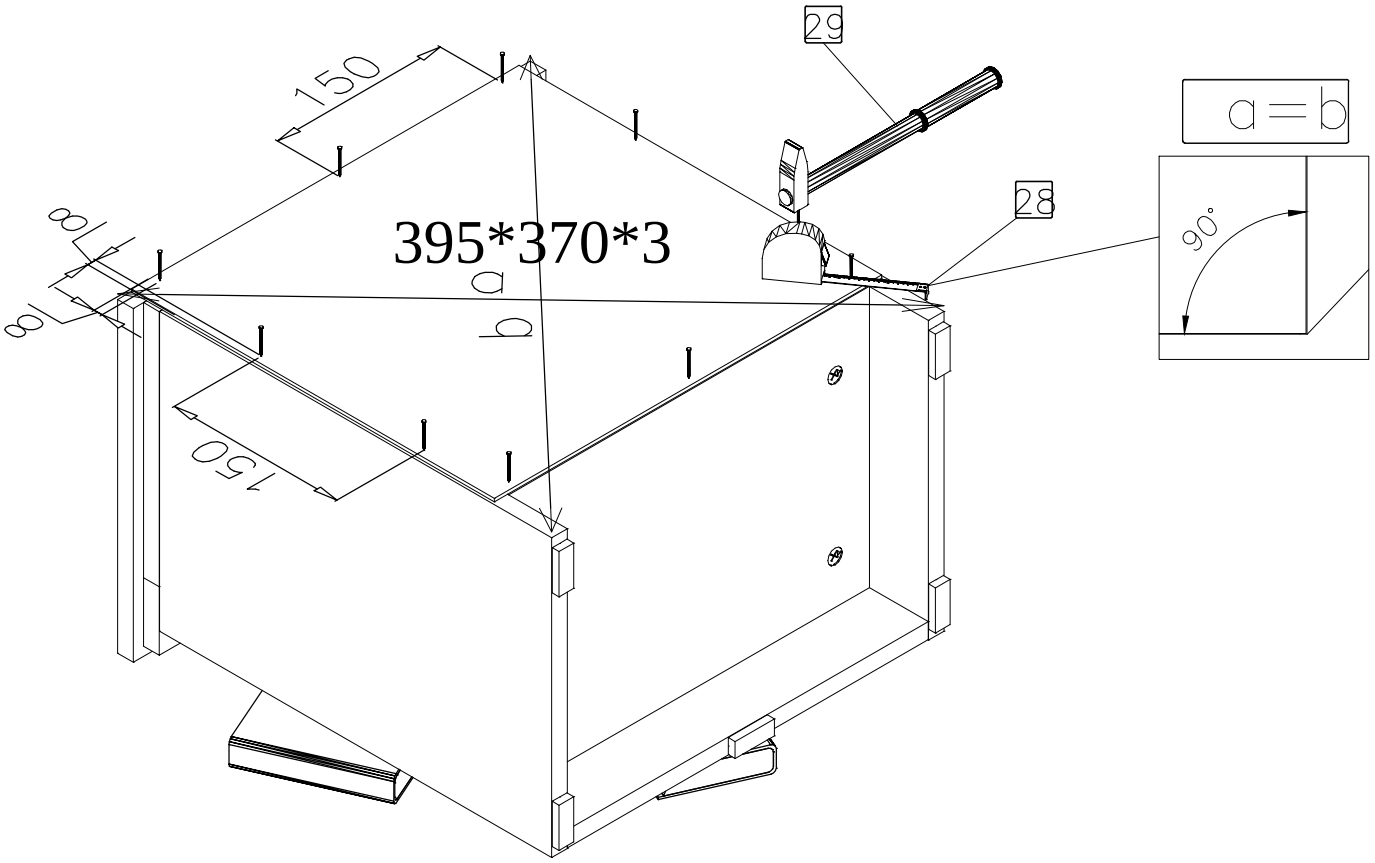
29
150
a=b
28
395*370*3
90°
a
b
150

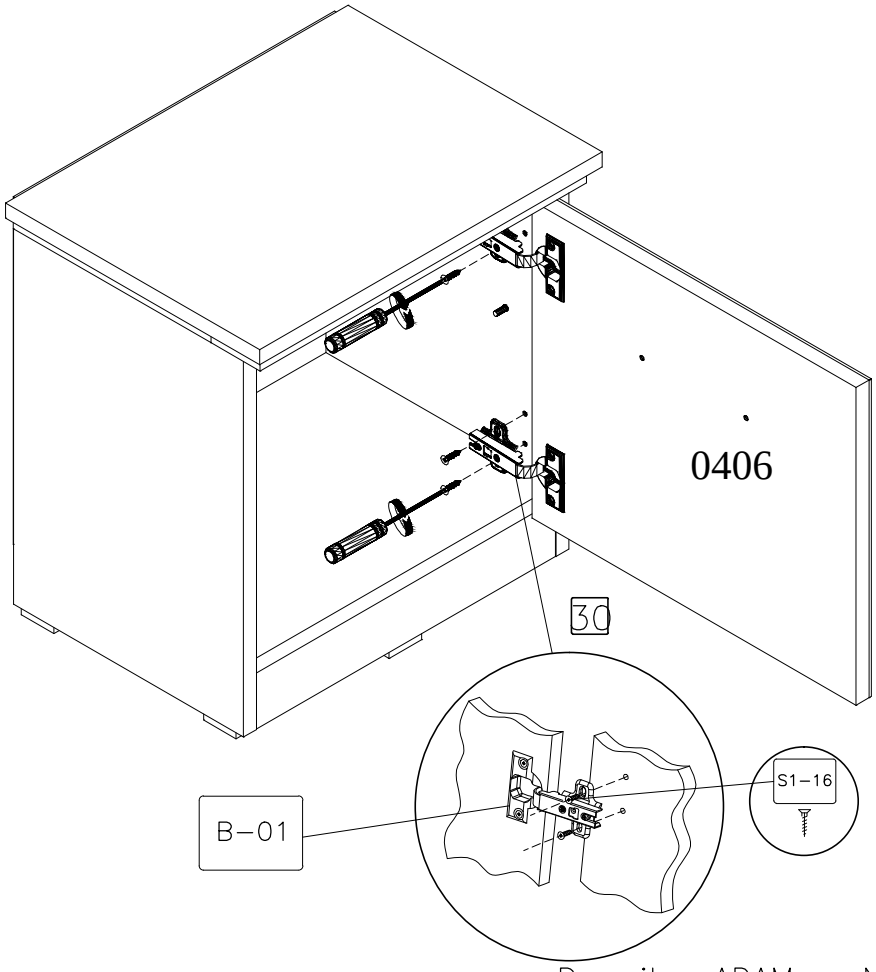
0406
30
S1-16
B-01

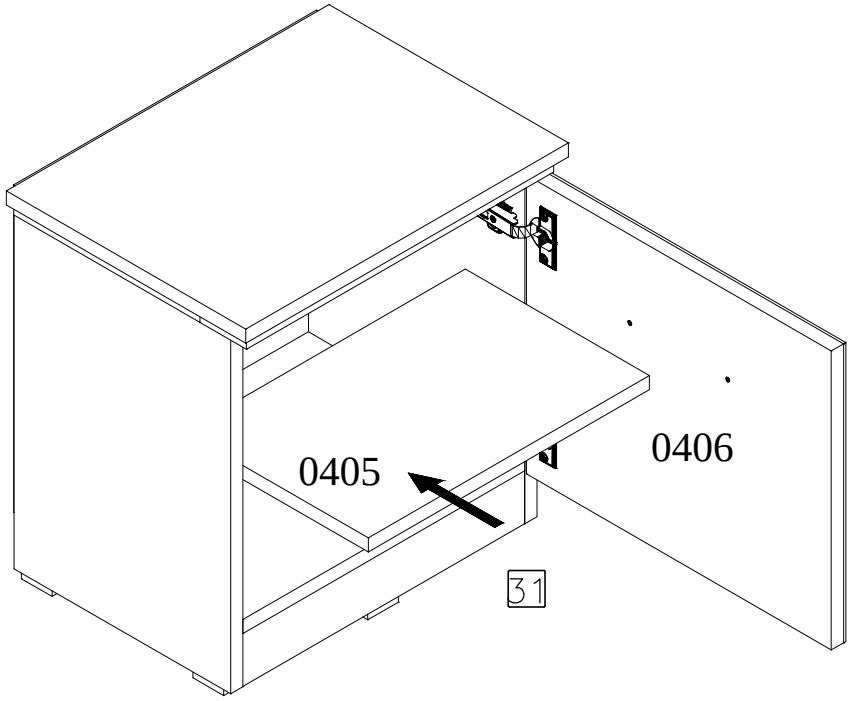
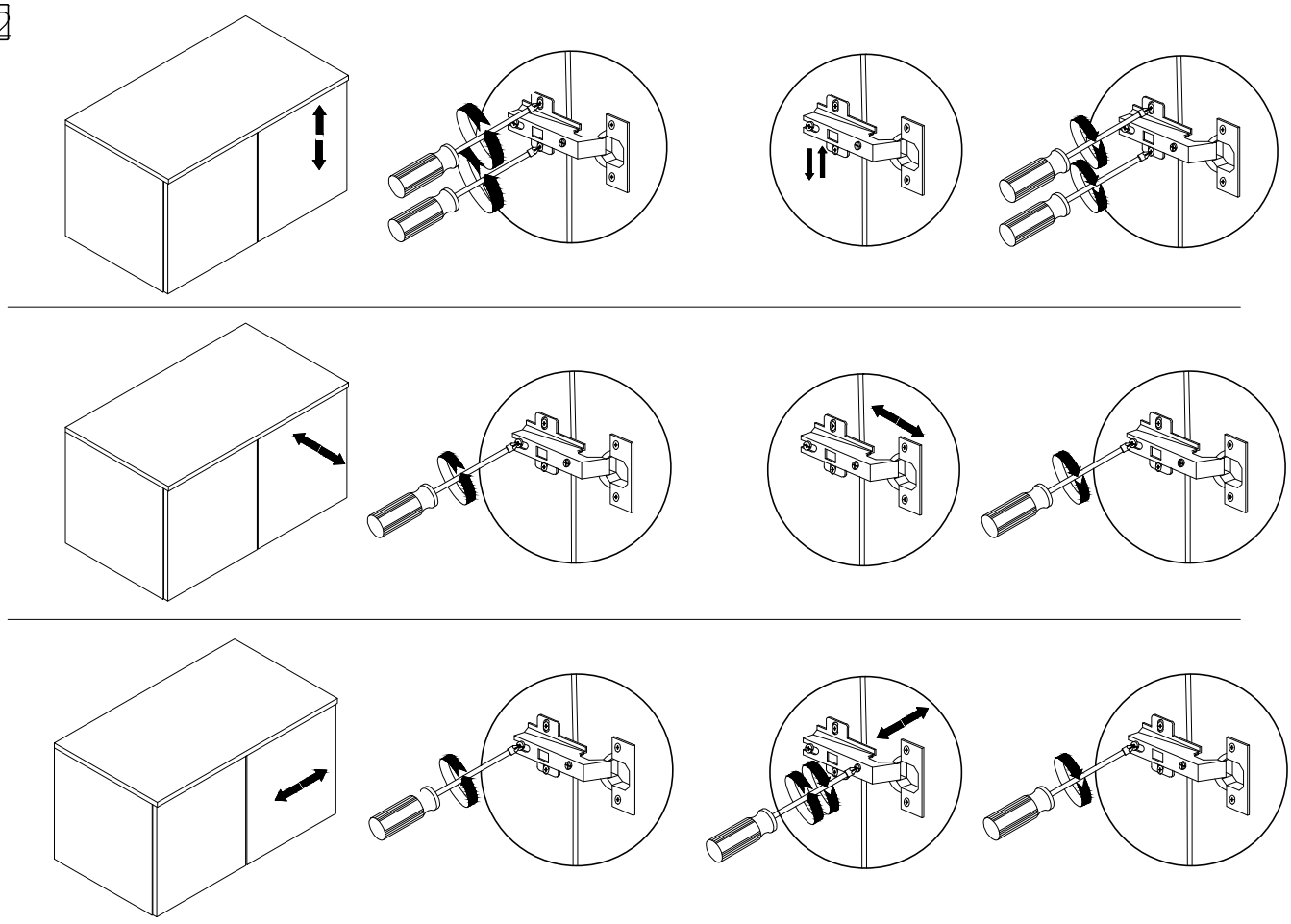
32