PRODUCT : LIVING ANIA

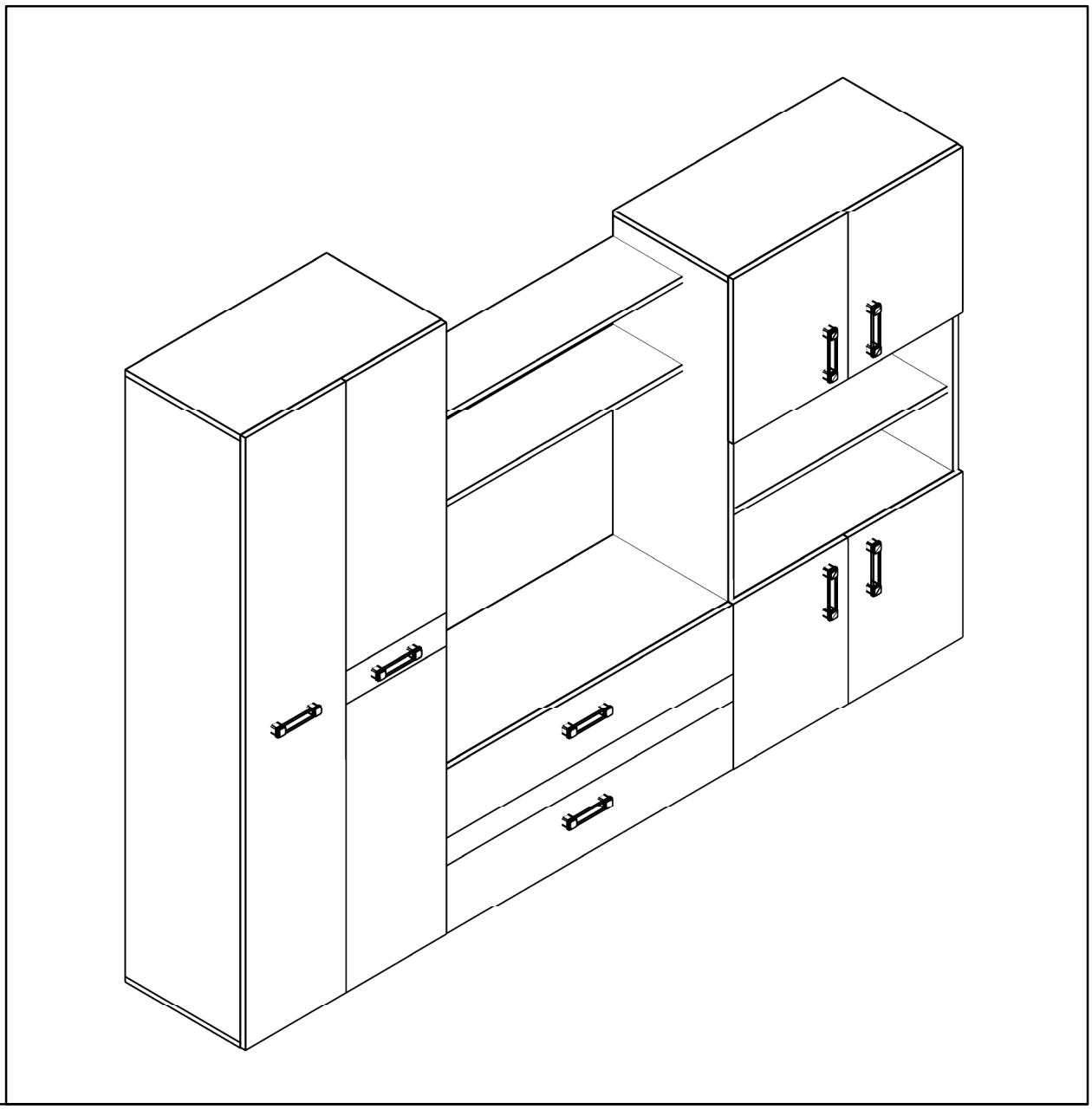

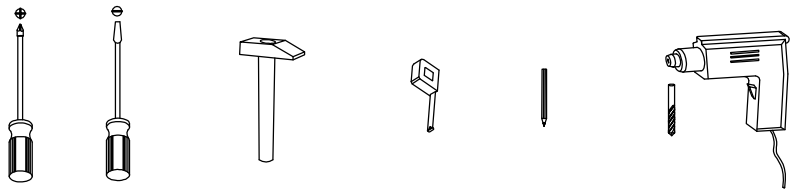

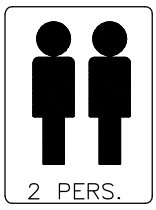

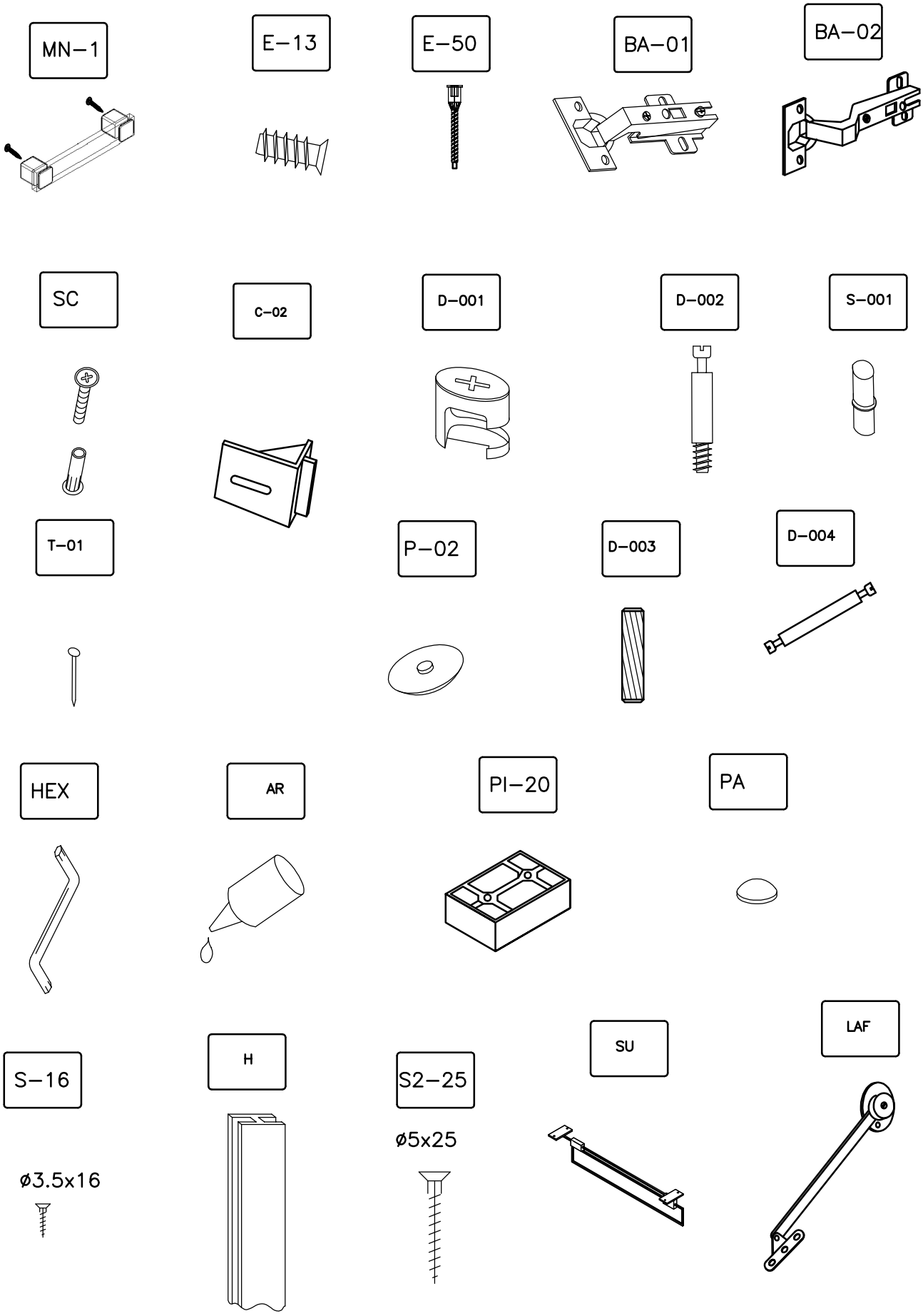
MN–1
E–13
E–50
BA–01
BA–02
SC
C–02
D–001
D–002
S–001
T–01
P–02
D–003
D–004
HEX
AR
PI–20
PA
S–16
ø3.5x16
H
S2–25
ø5x25
SU
LAF

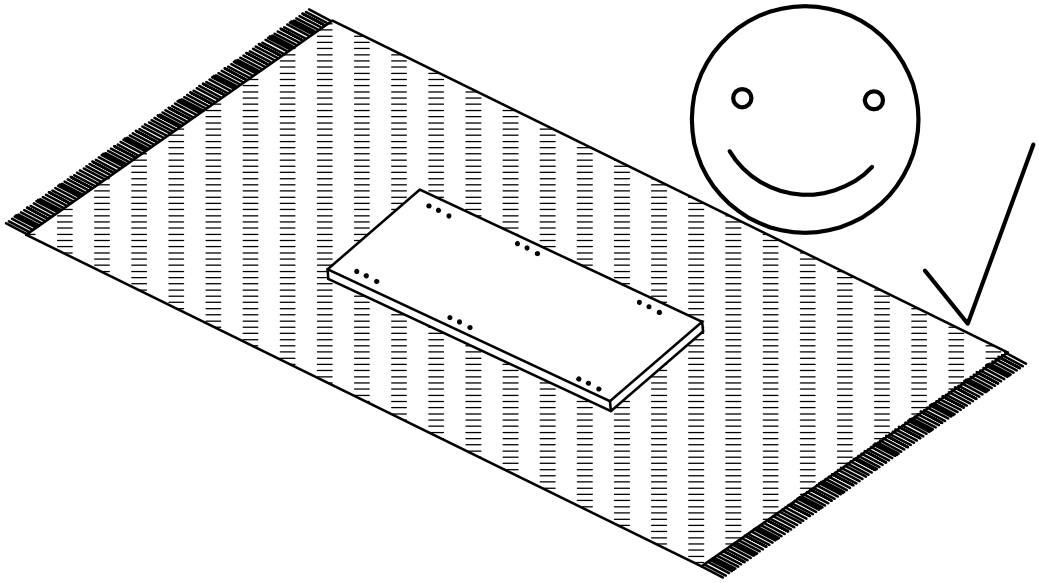

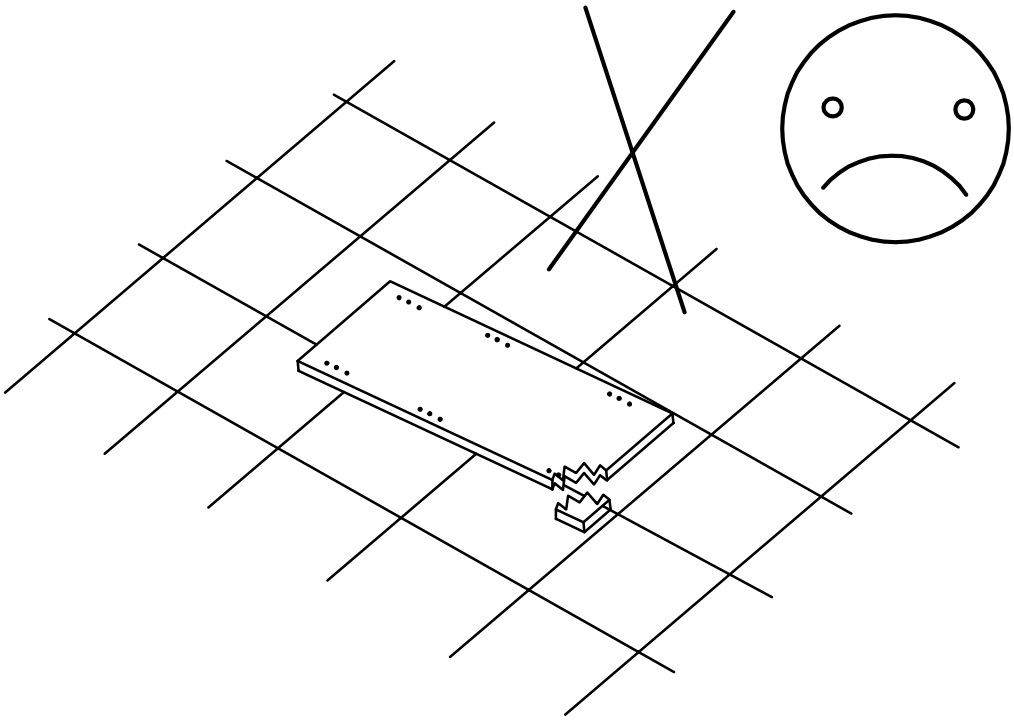

Caracteristici tehnice produs

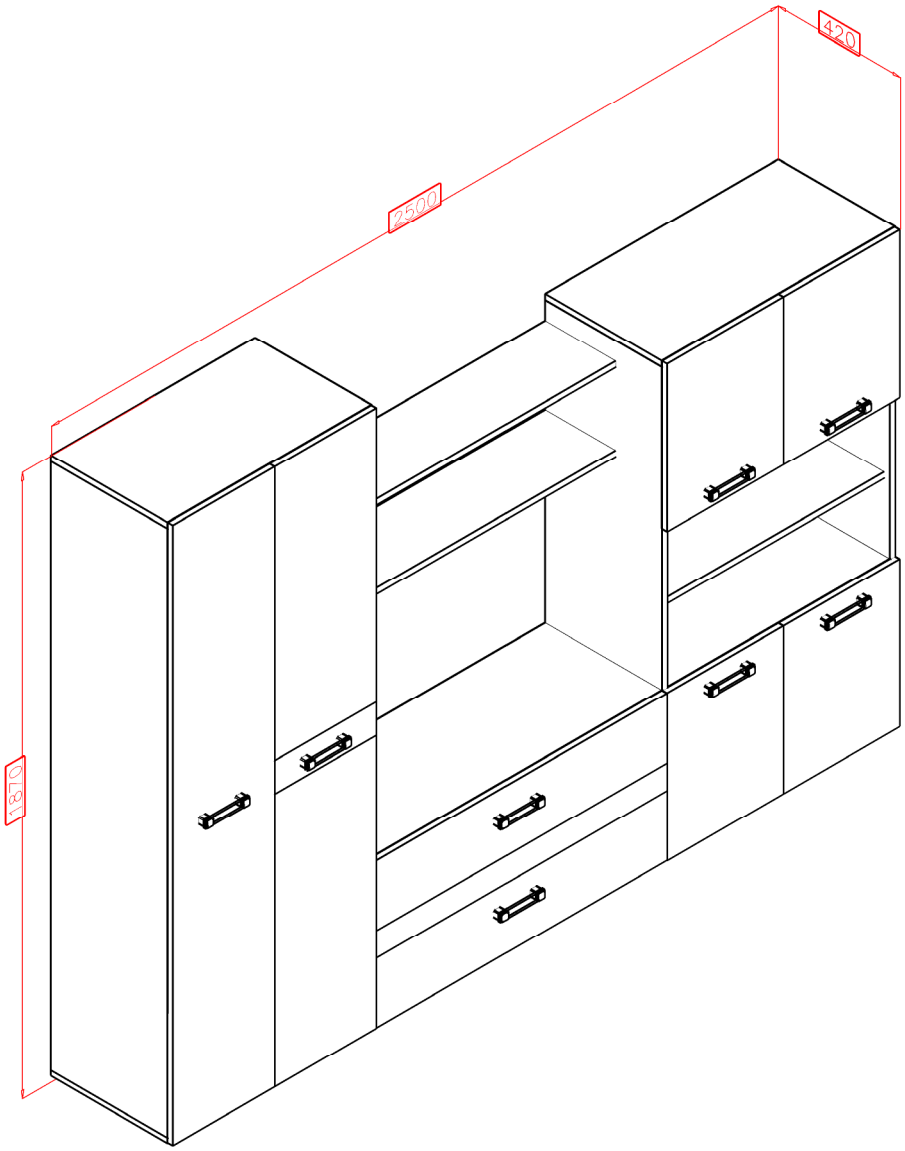

Materiale:
- Placi din aschii de lemn (PAL), meleminate de grosime = 16 mm
- Placi din fibre de lemn de inalta densitate (HDF) de grosime = 3 mm
- Cant ABS 0.5 mm
- Picior dreptunghic 60x40x20 plastic culoare argintiu mat
- Elemente de imbinare din lemn si metalice
- Manere plastic, culoare Crom mat
- Balamale aruncatoare metalice
- Suport umerase metalic extractabil

PRODUCT : ANIA – Wardrobe

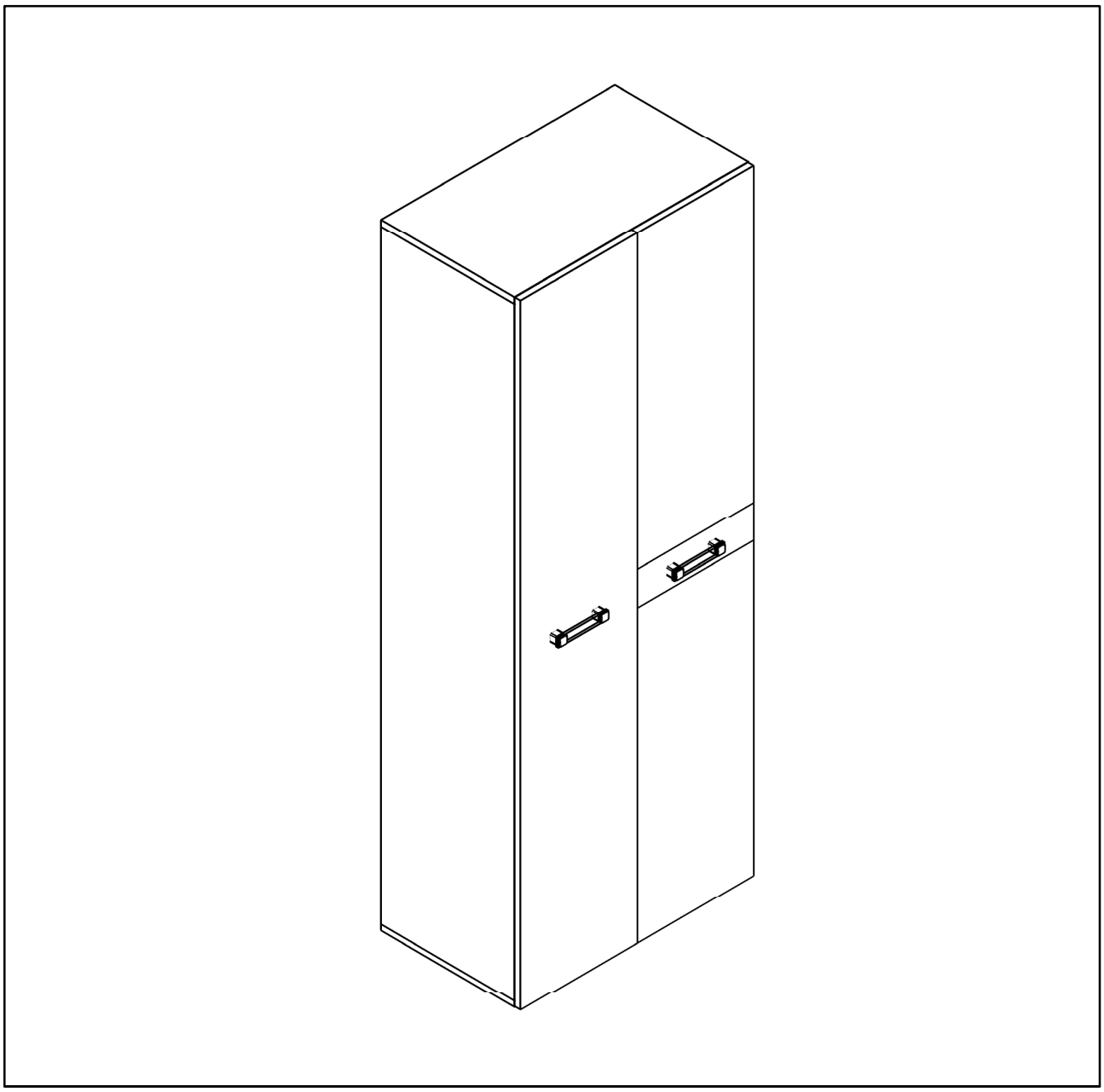

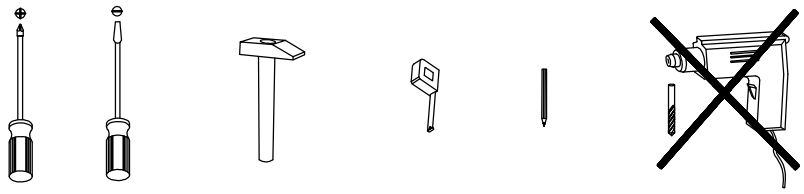

701x400x16

0103

1848x348x16

0106

1818x400x16

0101

1818x400x16

0102

1848x348x16

0108

0109

0107

701x400x16

0104

668x400x16

0105

1846x348x3

1846x348x3

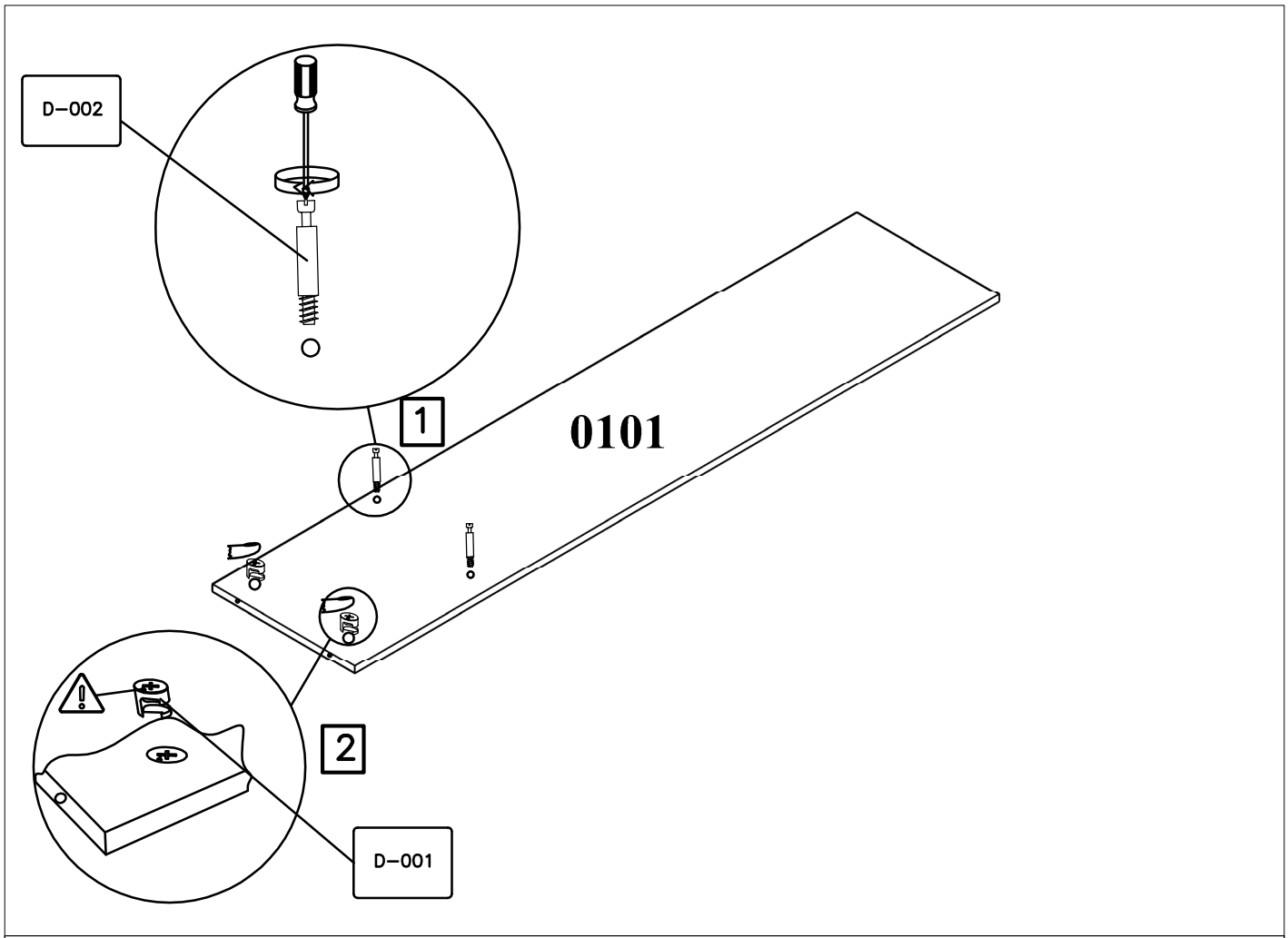
D–002
1
0101
2
D–001

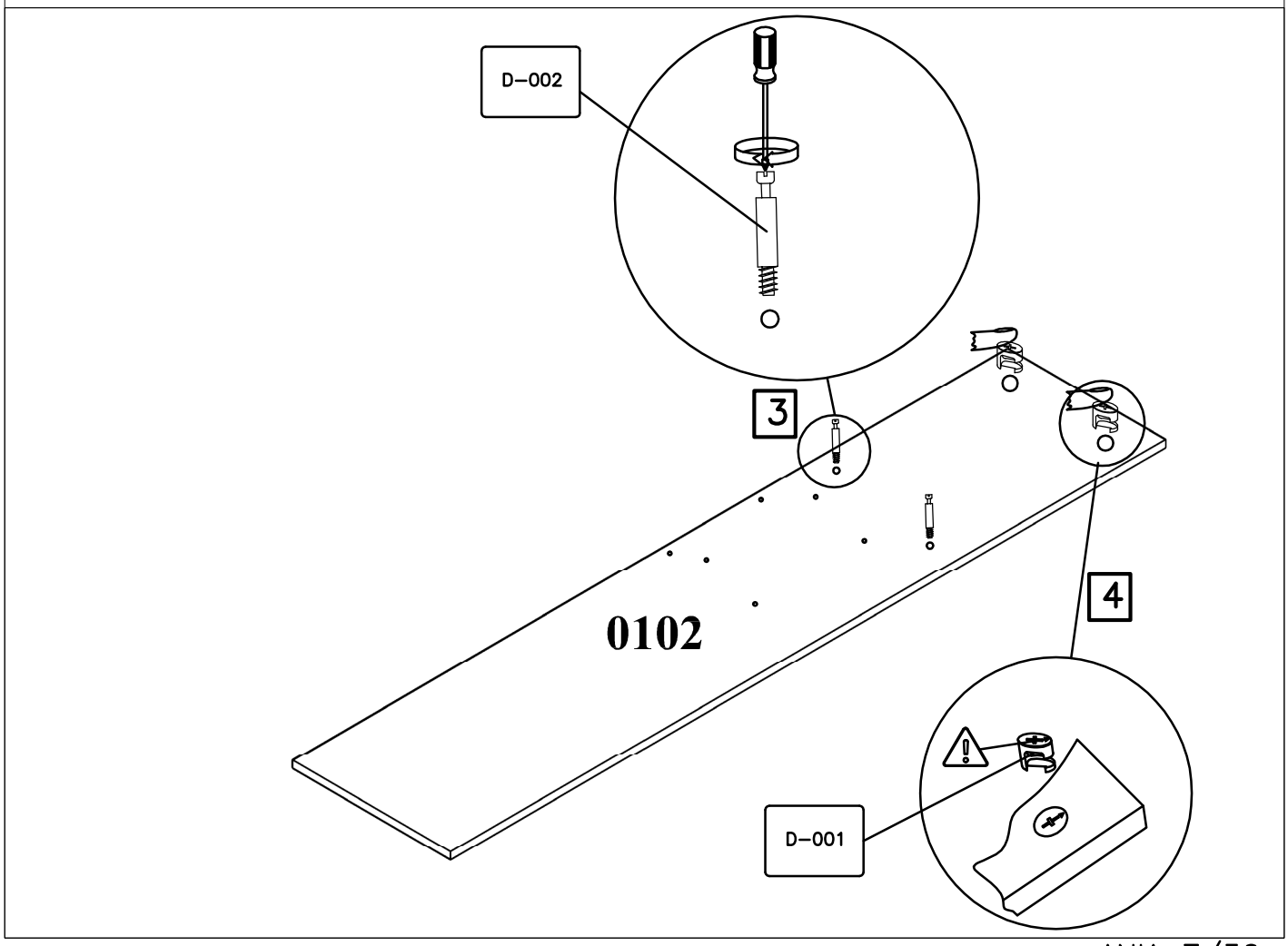
D–002
3
4
0102
D–001

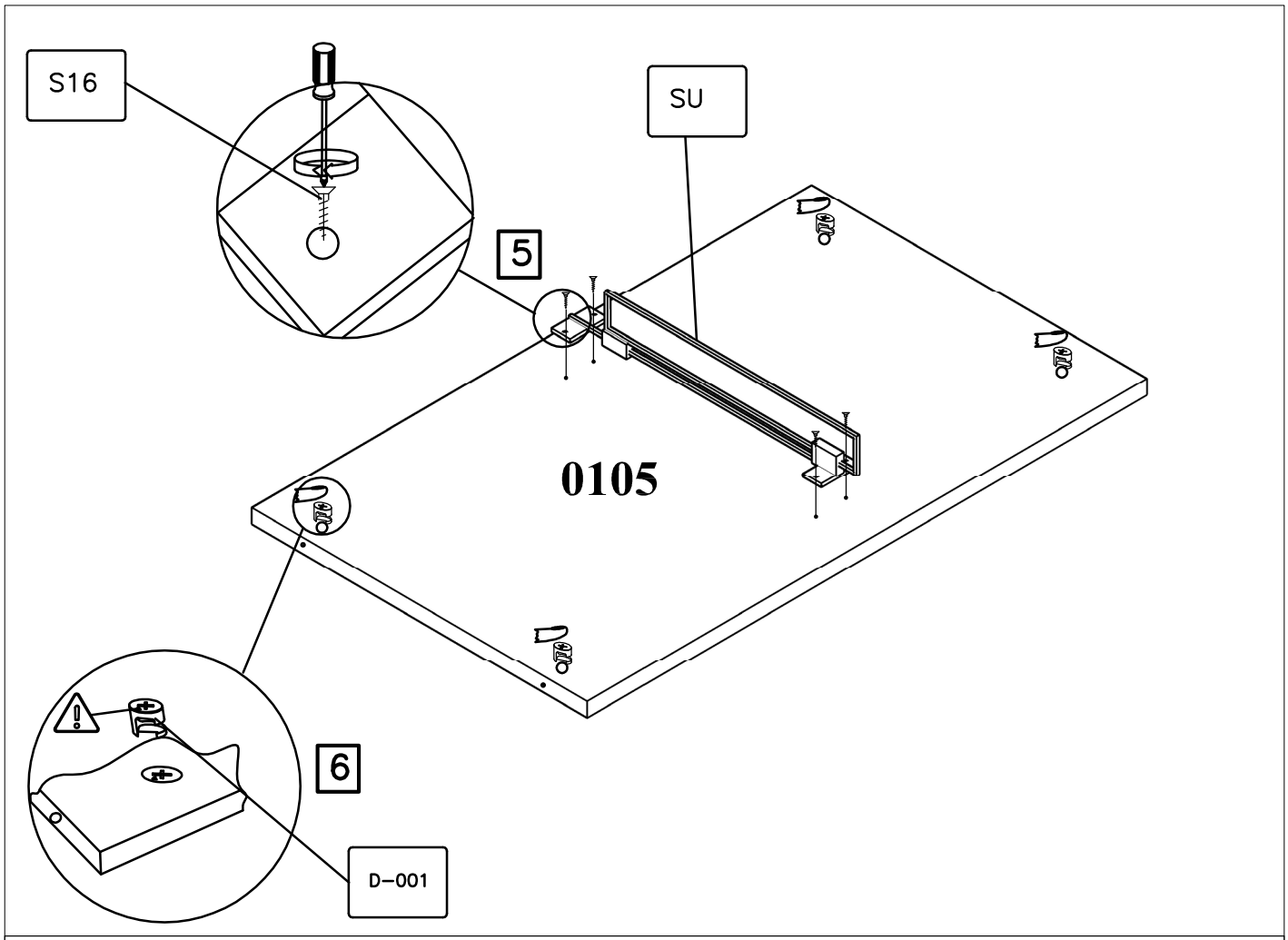
S16
SU
5
0105
6
D-001

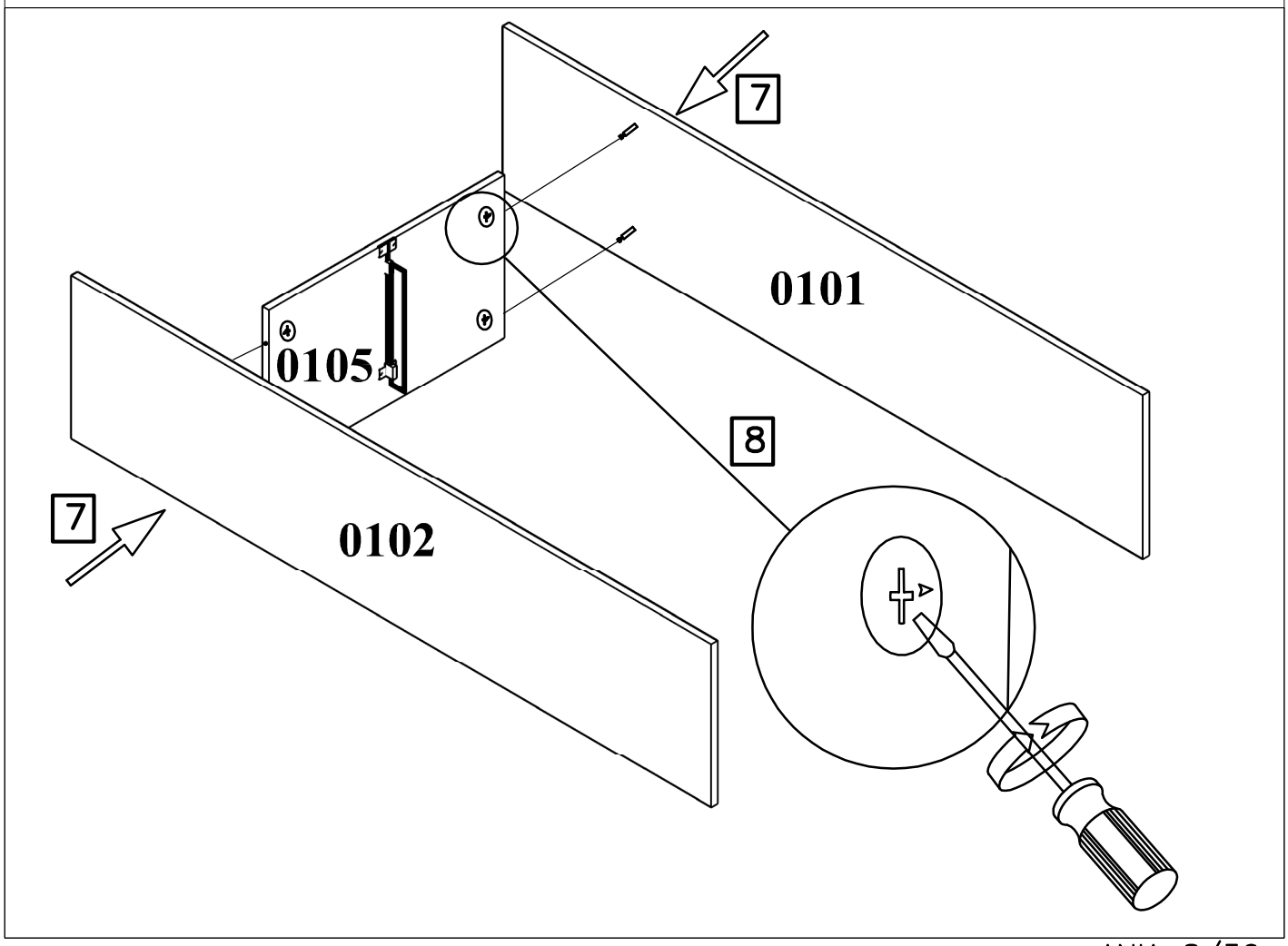
7
0101
0105
8
7
0102

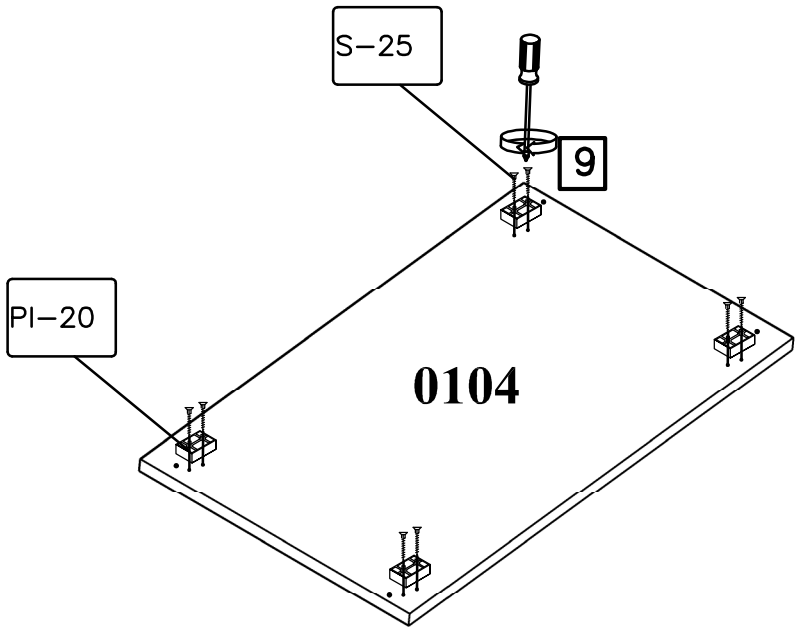
S–25
9
PI–20
0104

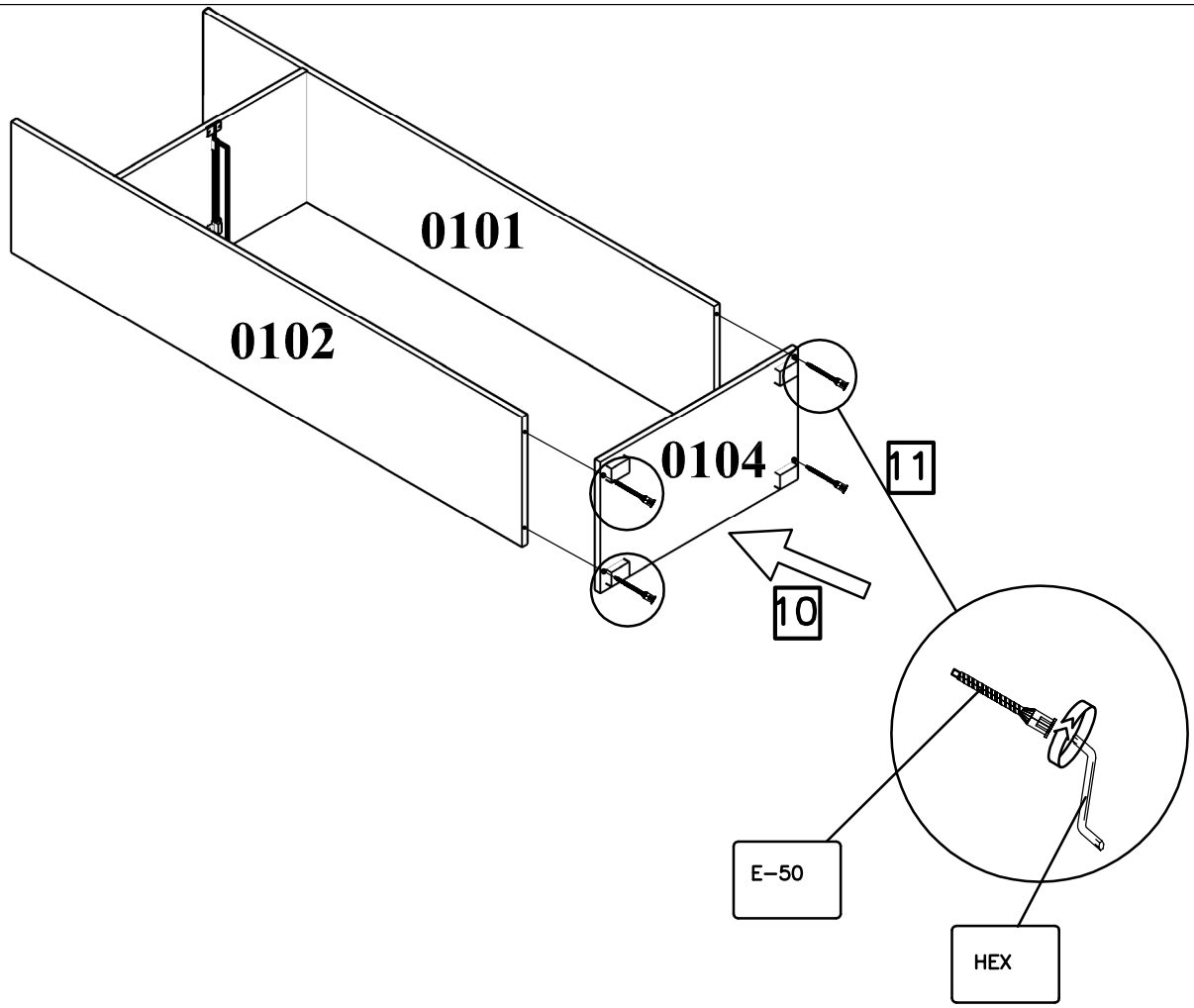
0101
0102
0104
11
10
E–50
HEX

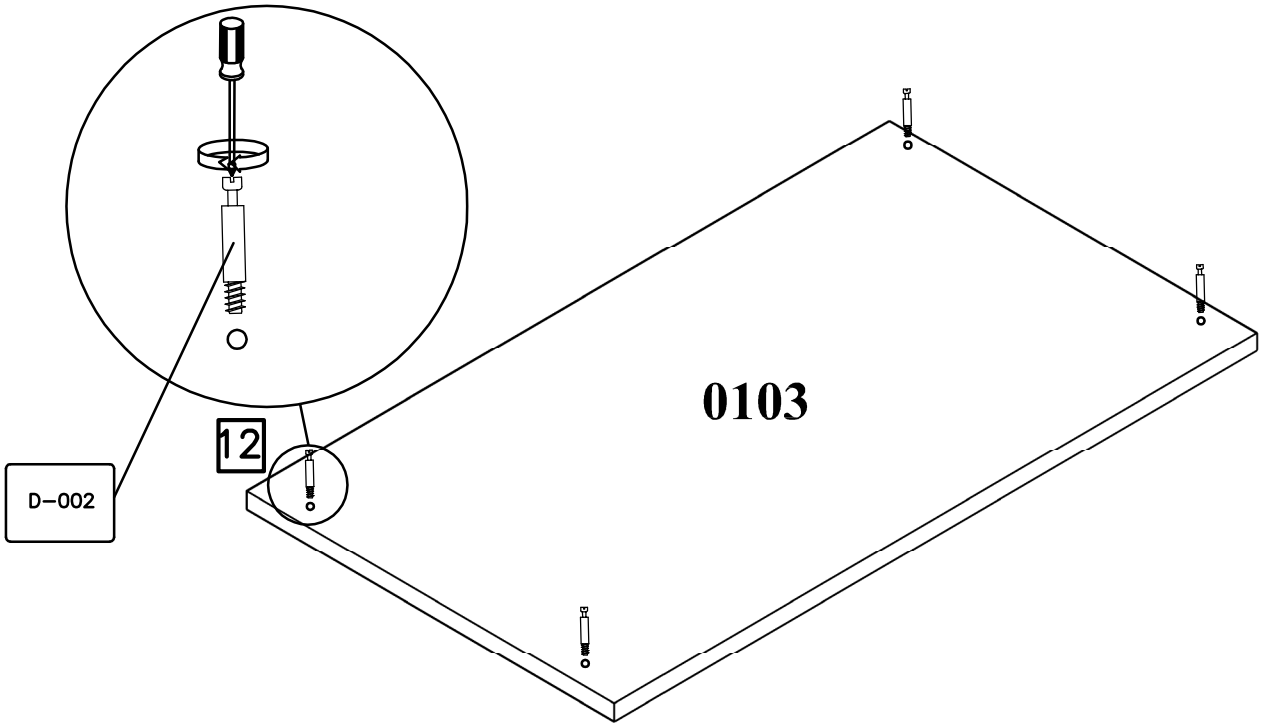
0103
12
D-002

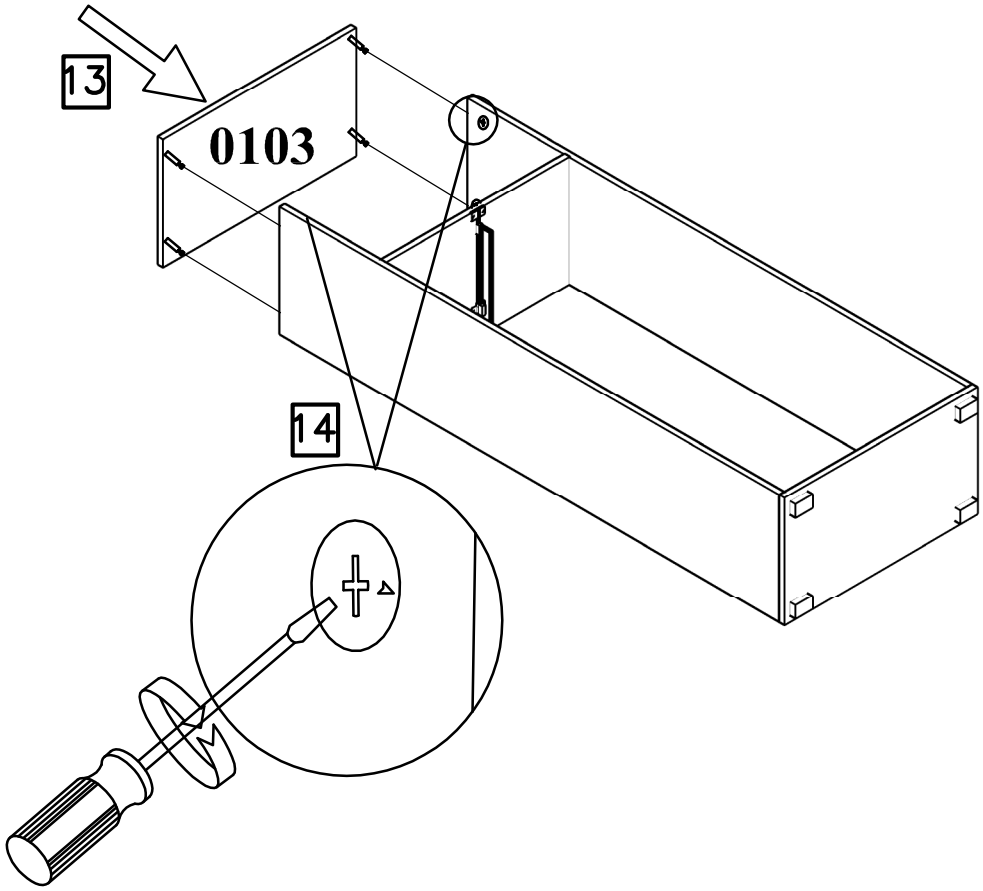
13
0103
14

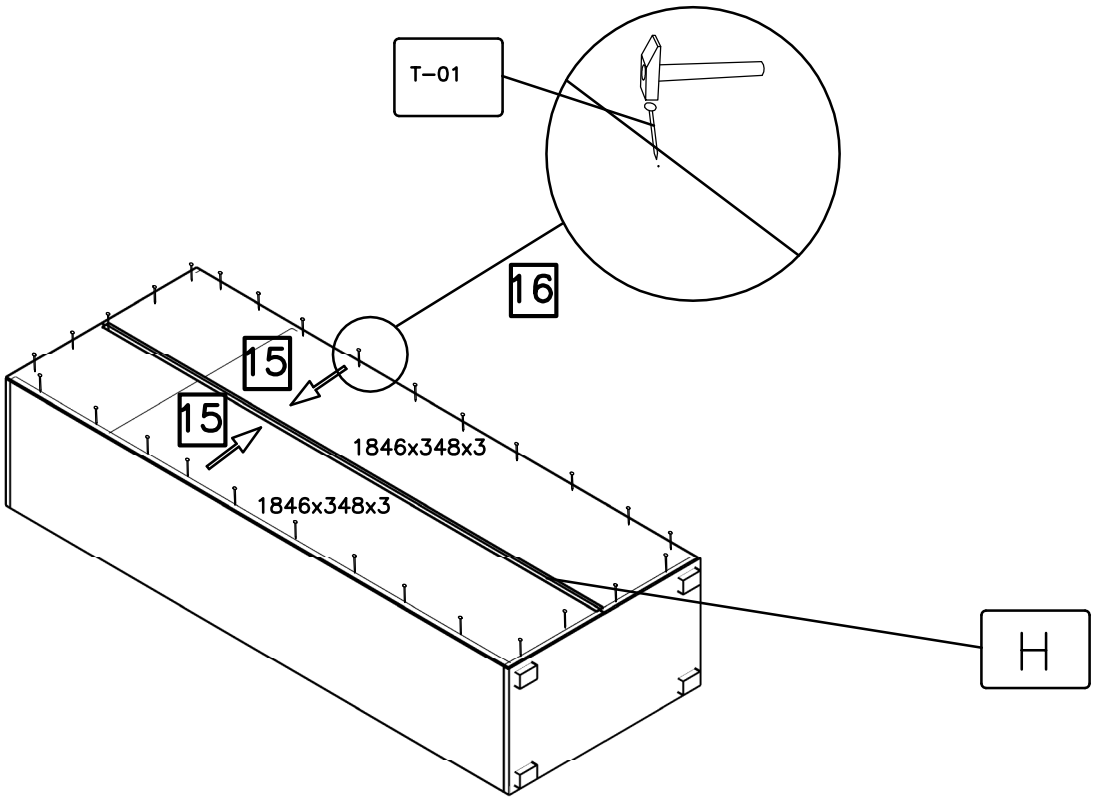
T–01
16
15
15
1846x348x3
1846x348x3
H

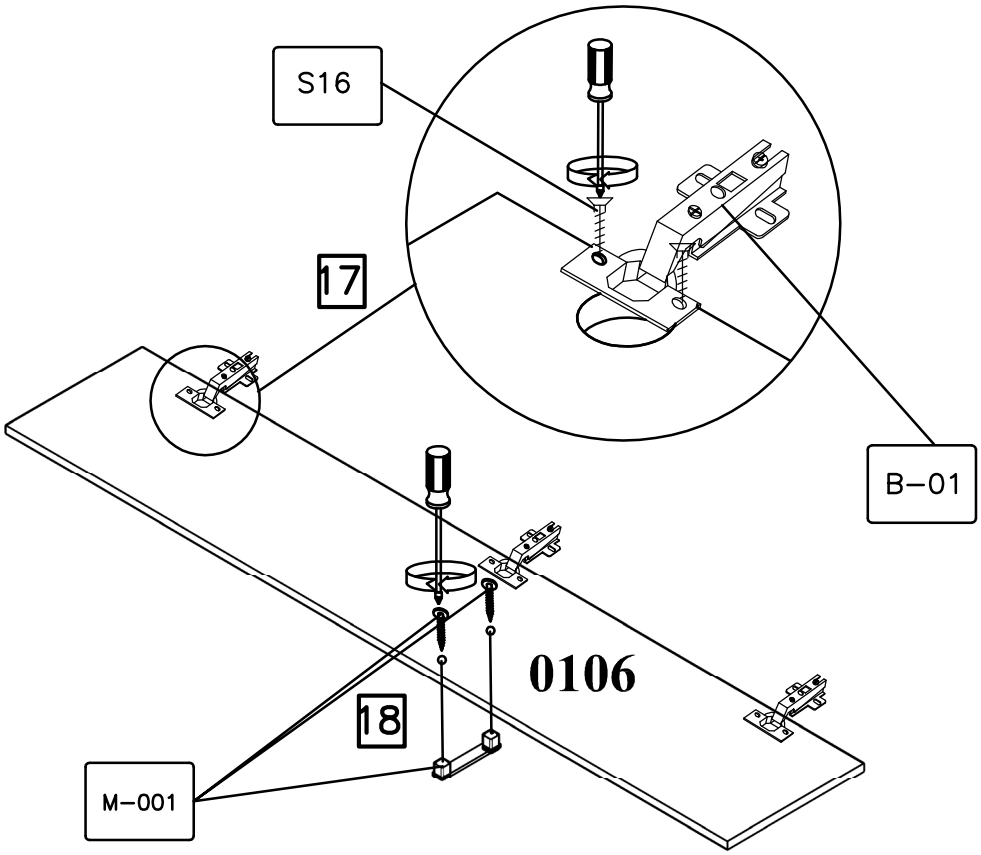
S16
17
B–01
0106
18
M–001

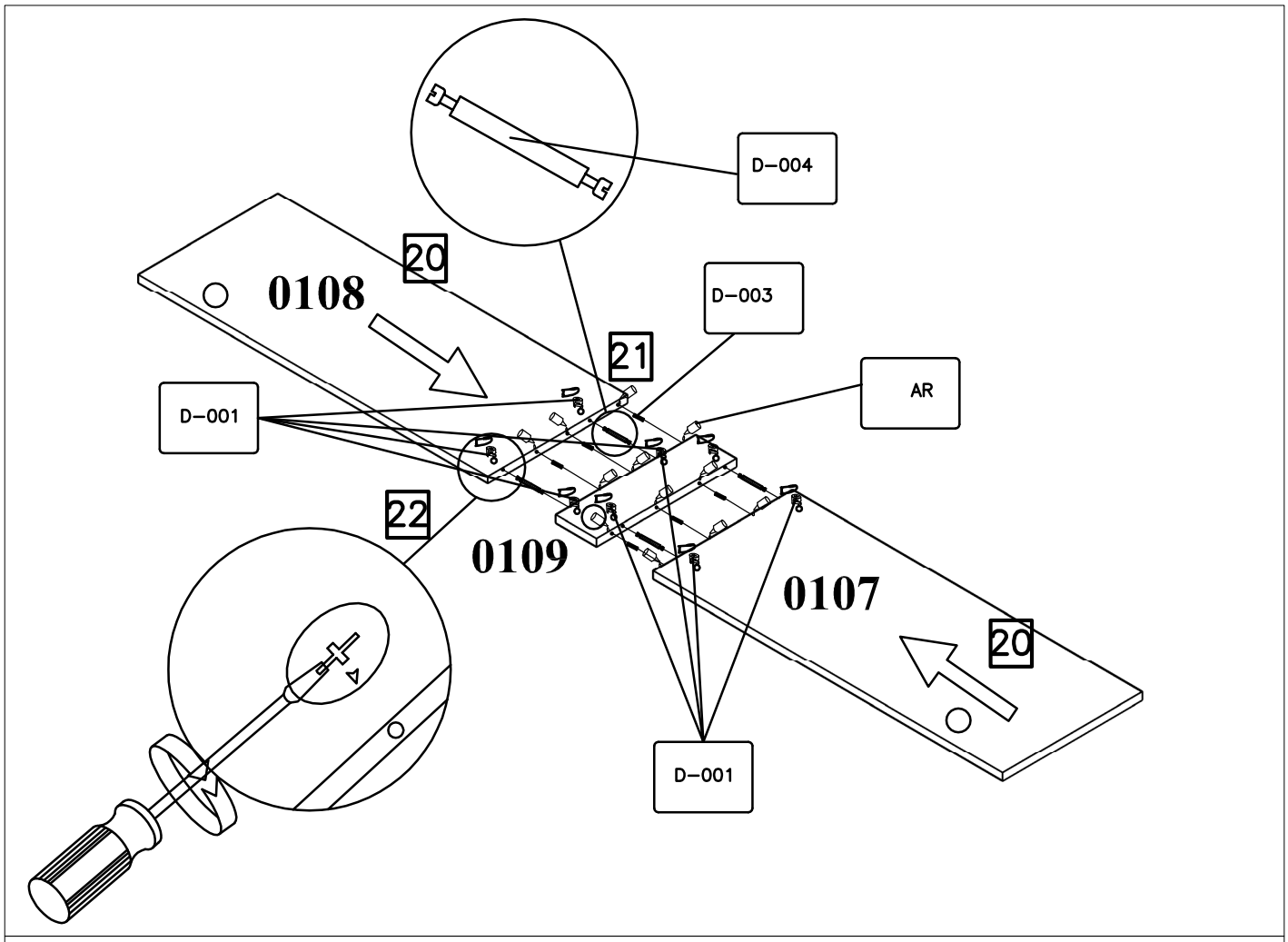
D-004
20
0108
D-003
21
AR
D-001
22
0109
0107
20
D-001

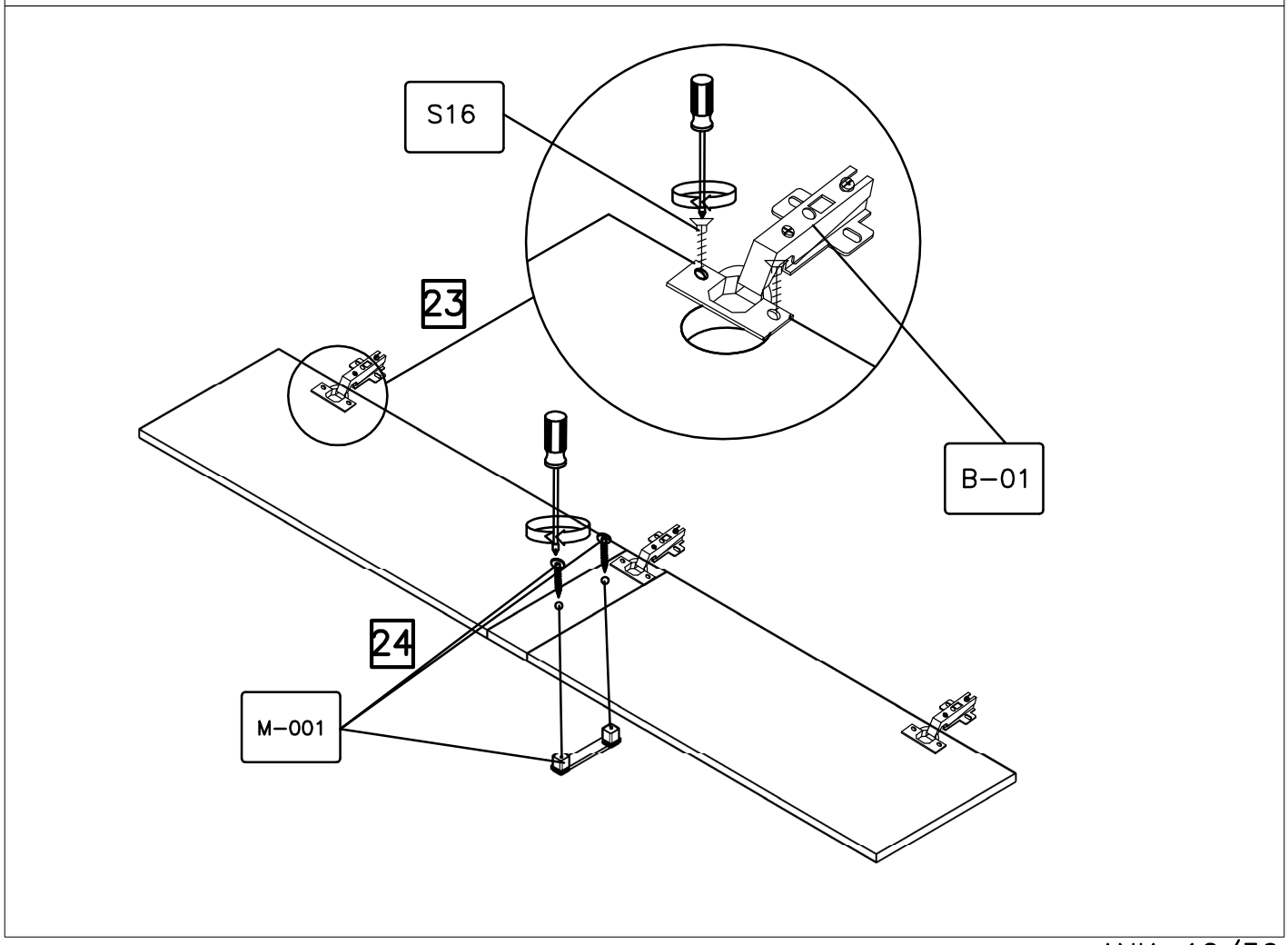
S16
23
B-01
24
M-001

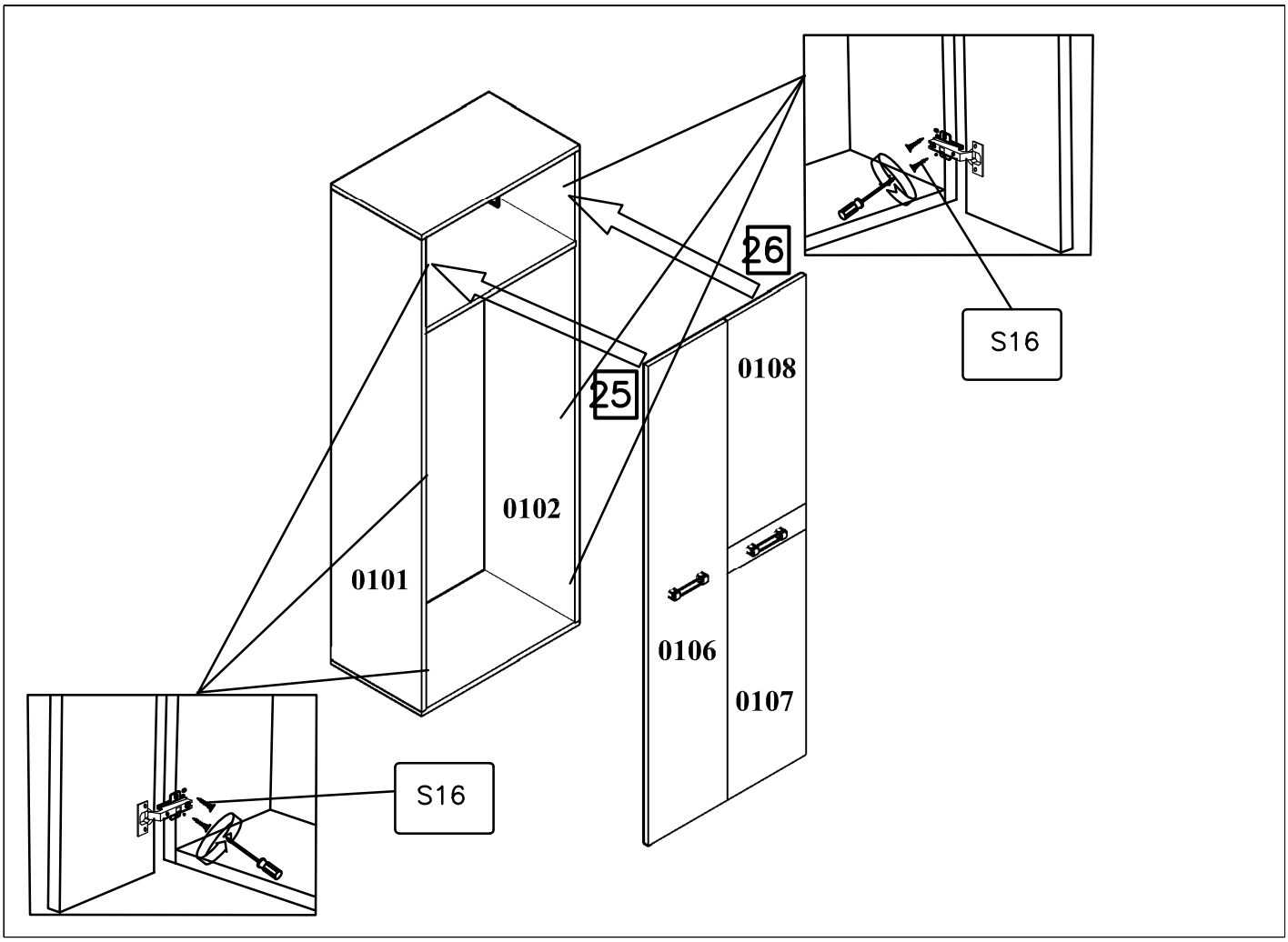

27

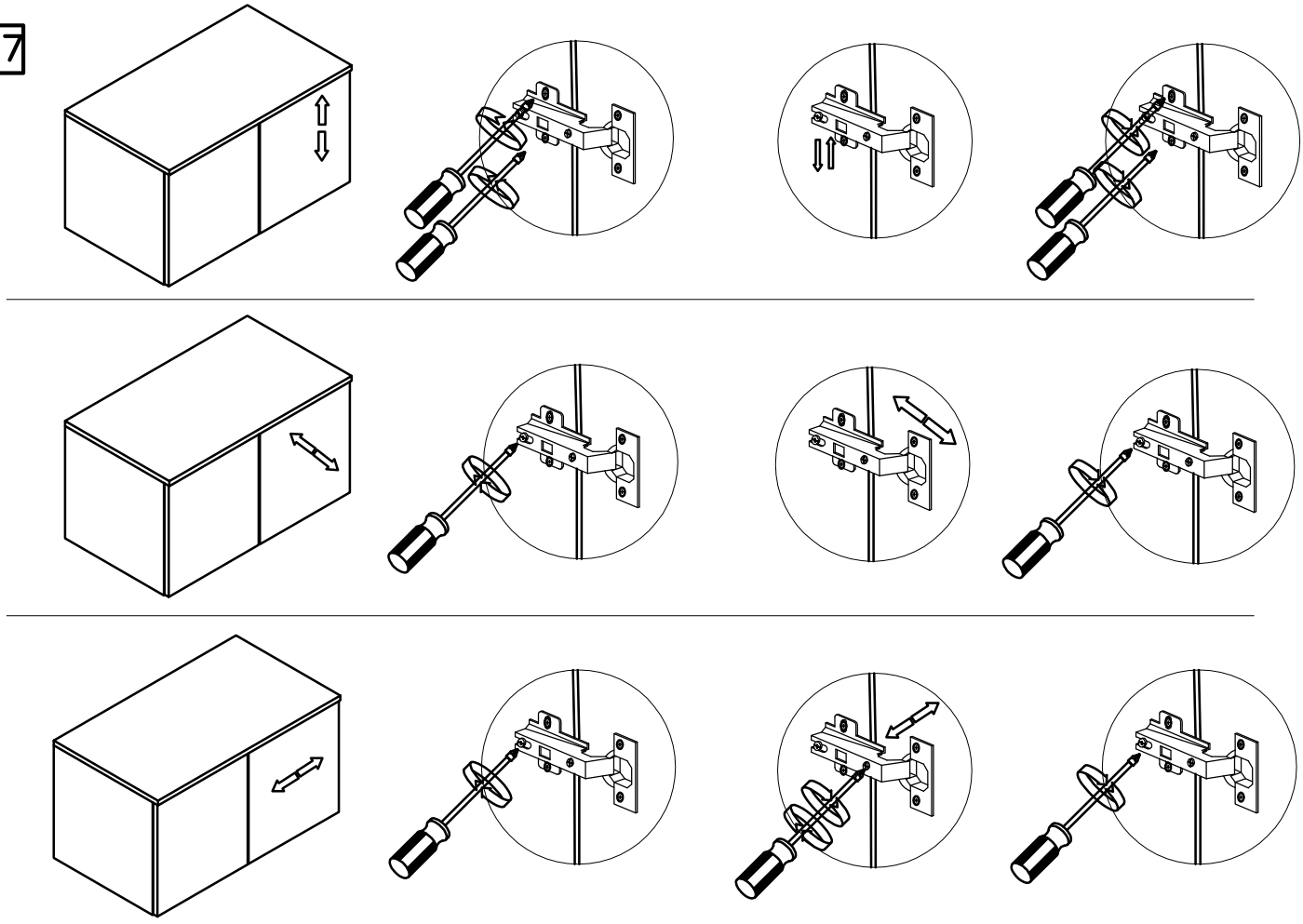

PRODUCT : ANIA – Chest of drawers

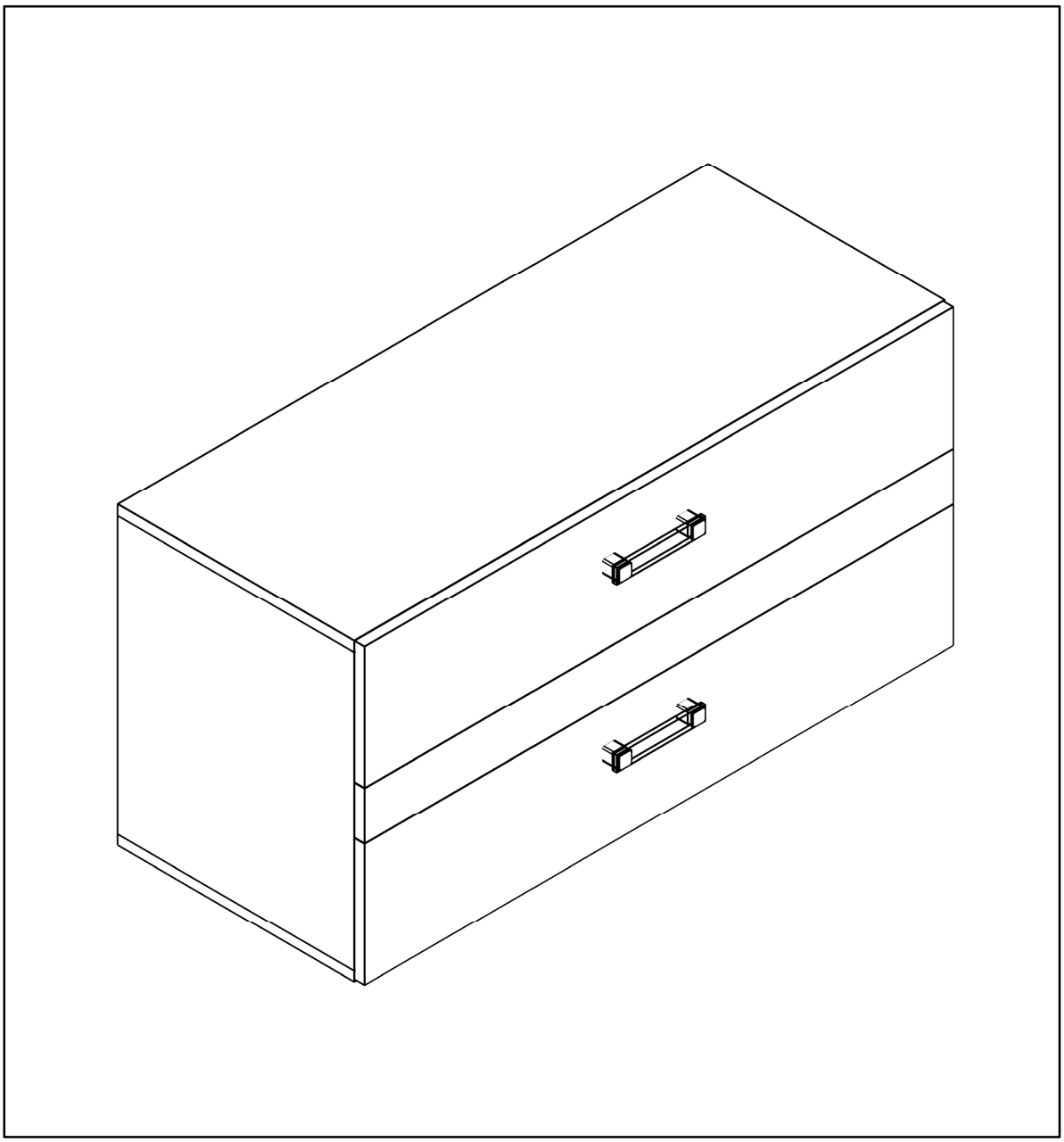

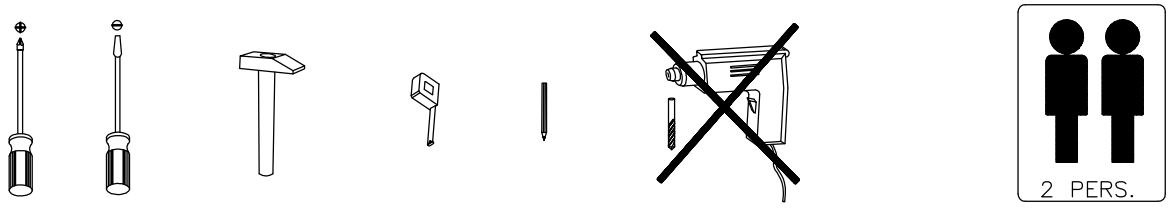

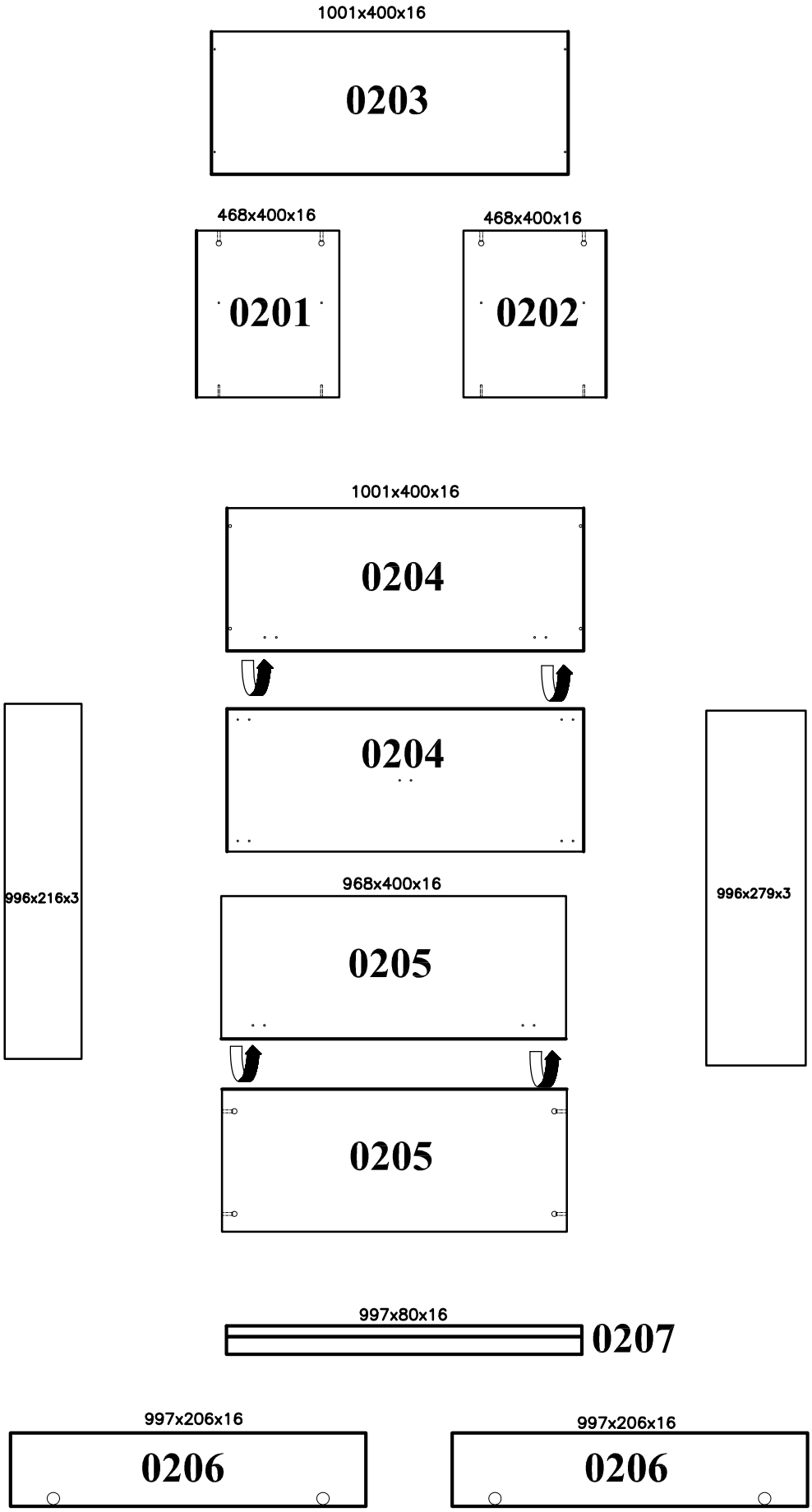
1001x400x16
0203
468x400x16
0201
468x400x16
0202
1001x400x16
0204
0204
996x216x3
996x279x3
968x400x16
0205
0205
997x80x16
0207
997x206x16
0206
997x206x16
0206

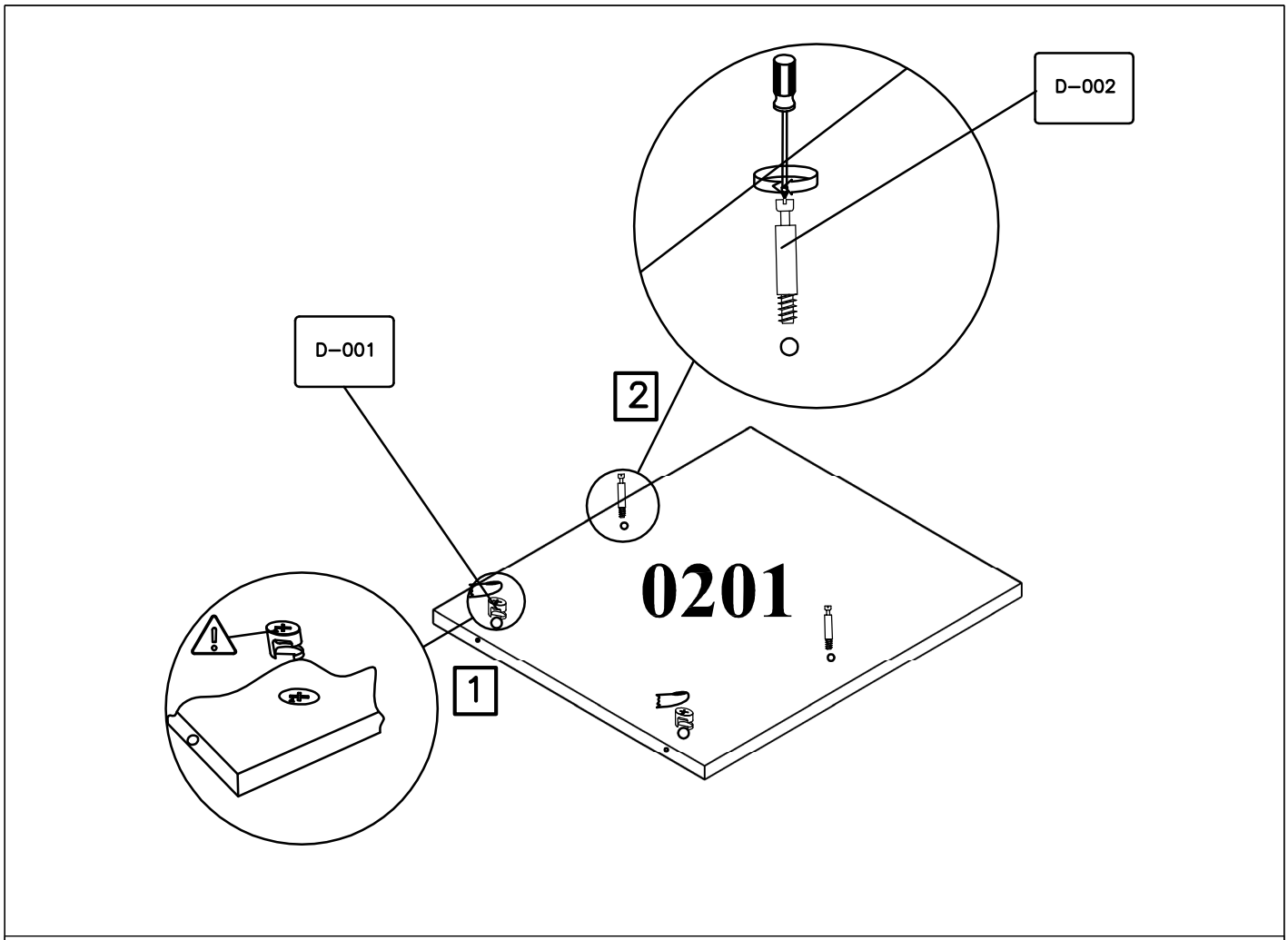
D–002
D–001
2
0201
1

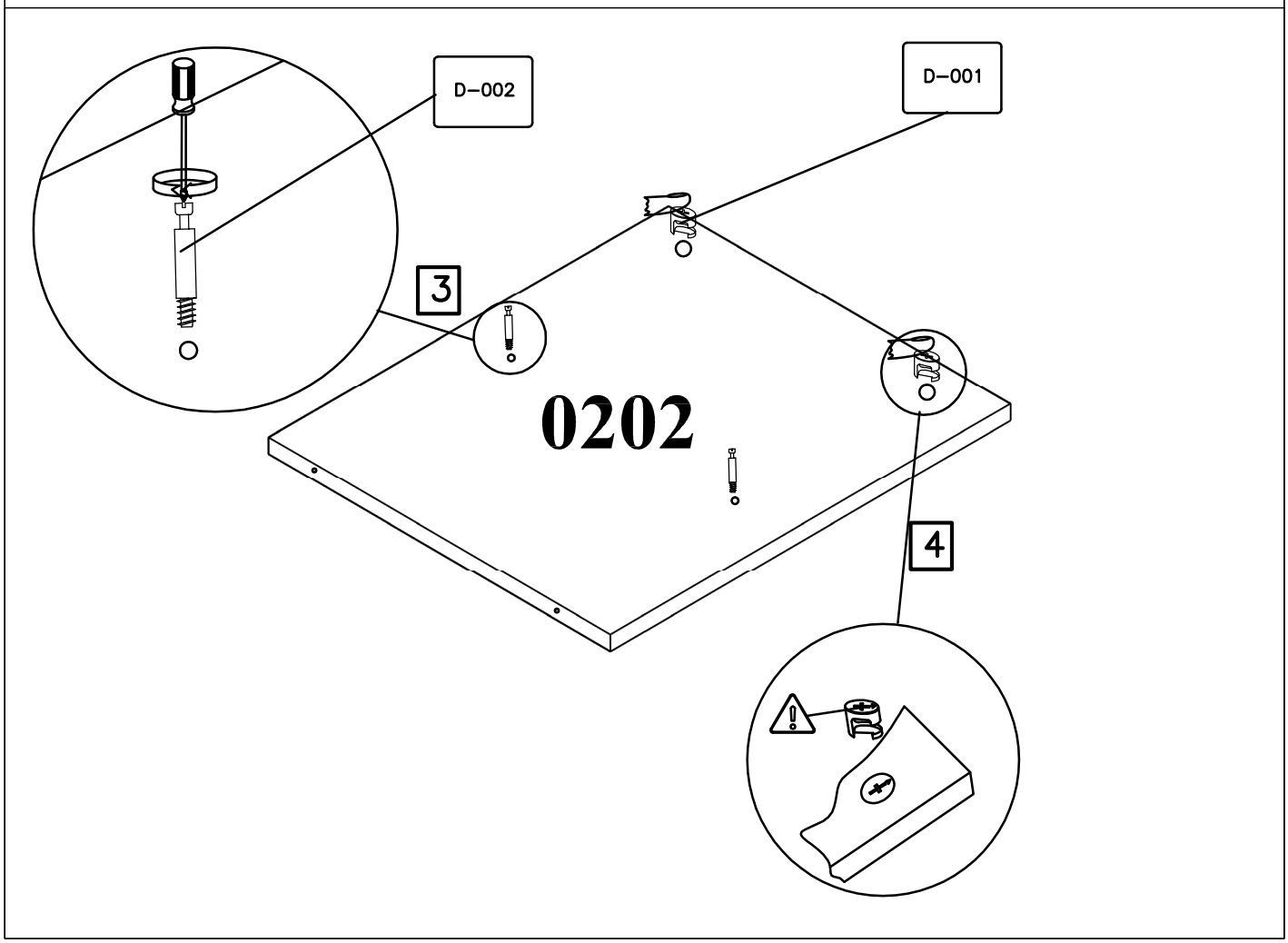
D–002
D–001
3
0202
4

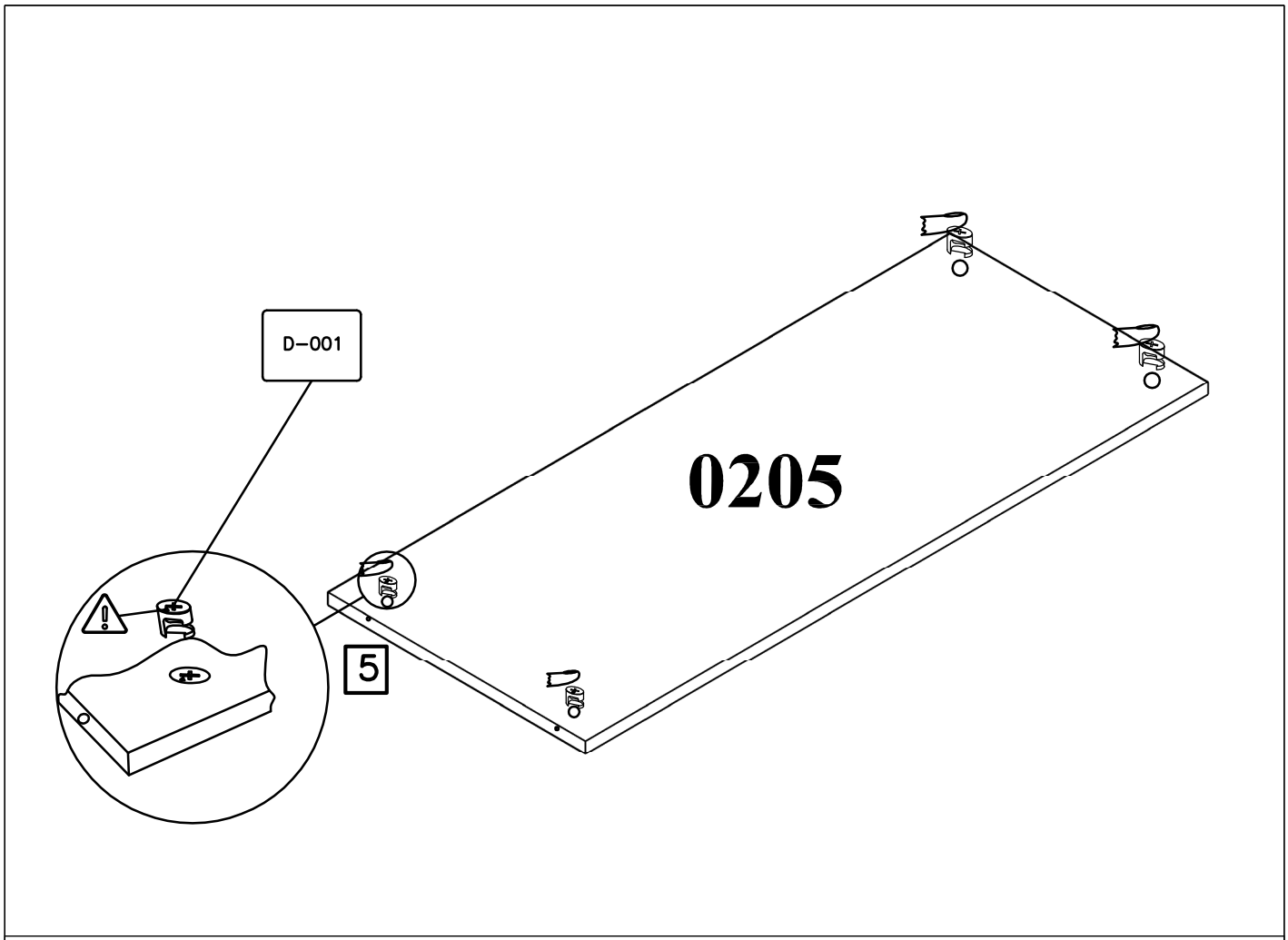
D-001
0205
5

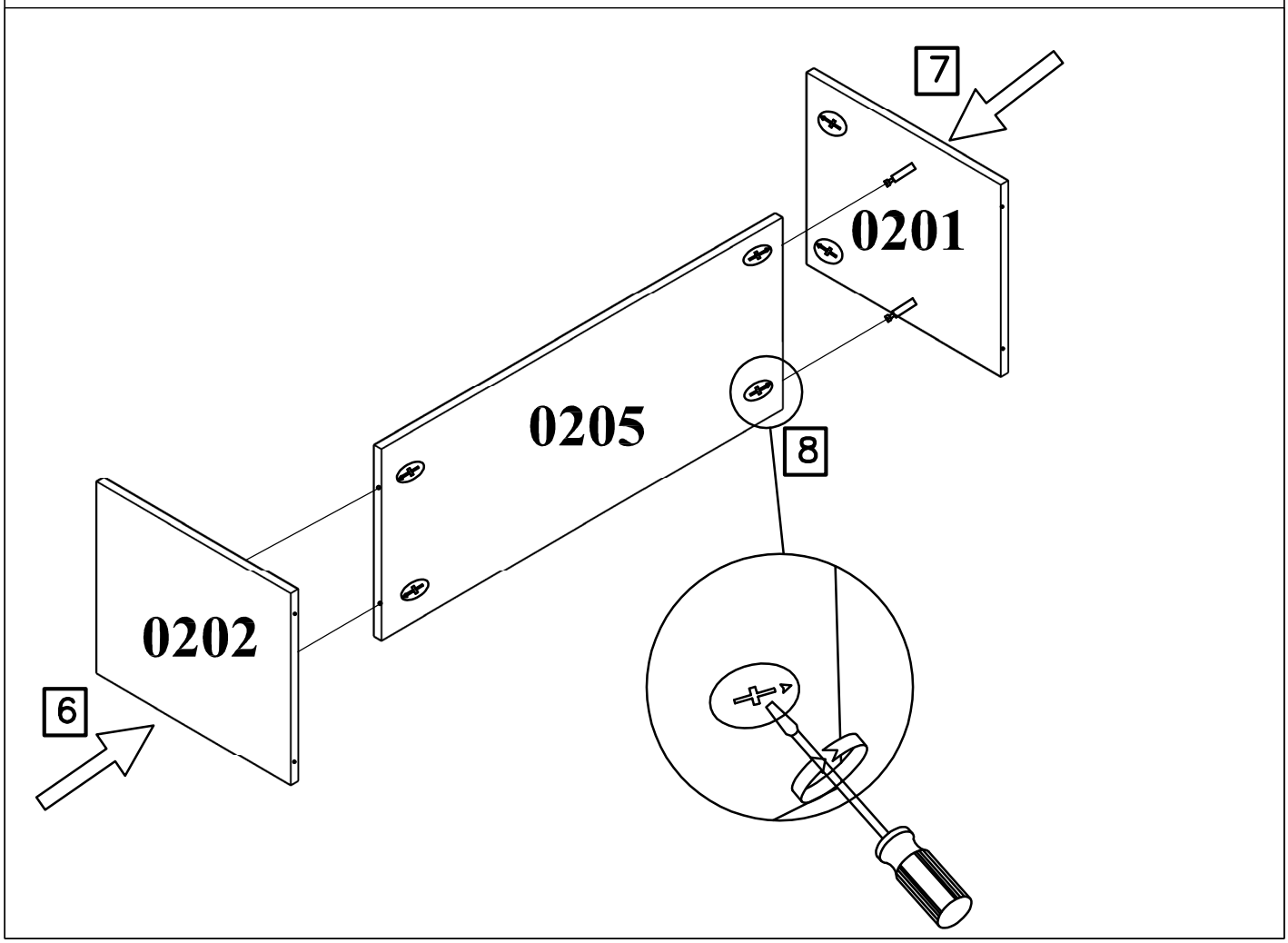
7
0201
0205
8
0202
6

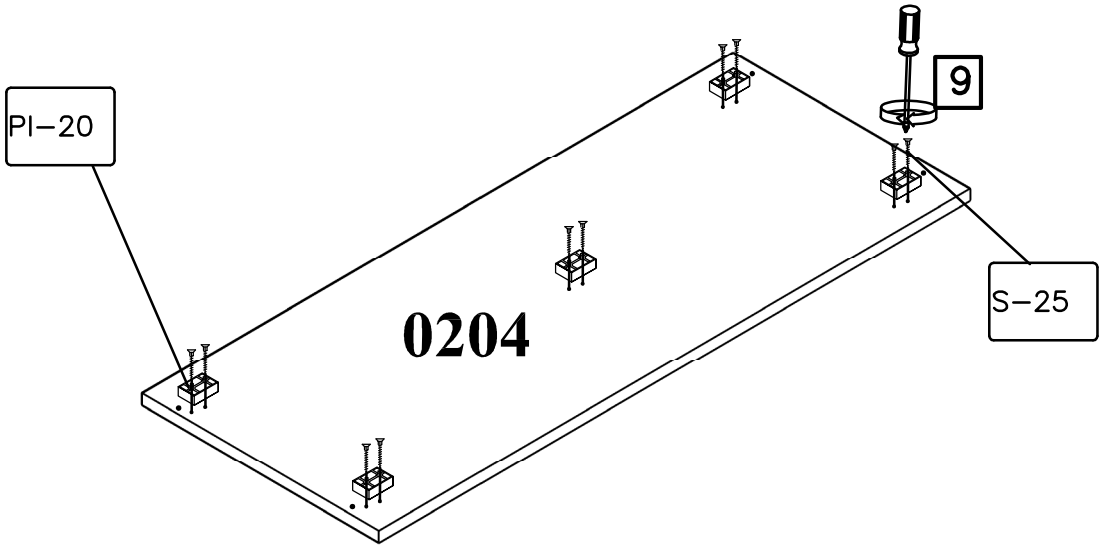
PI–20
9
S–25
0204

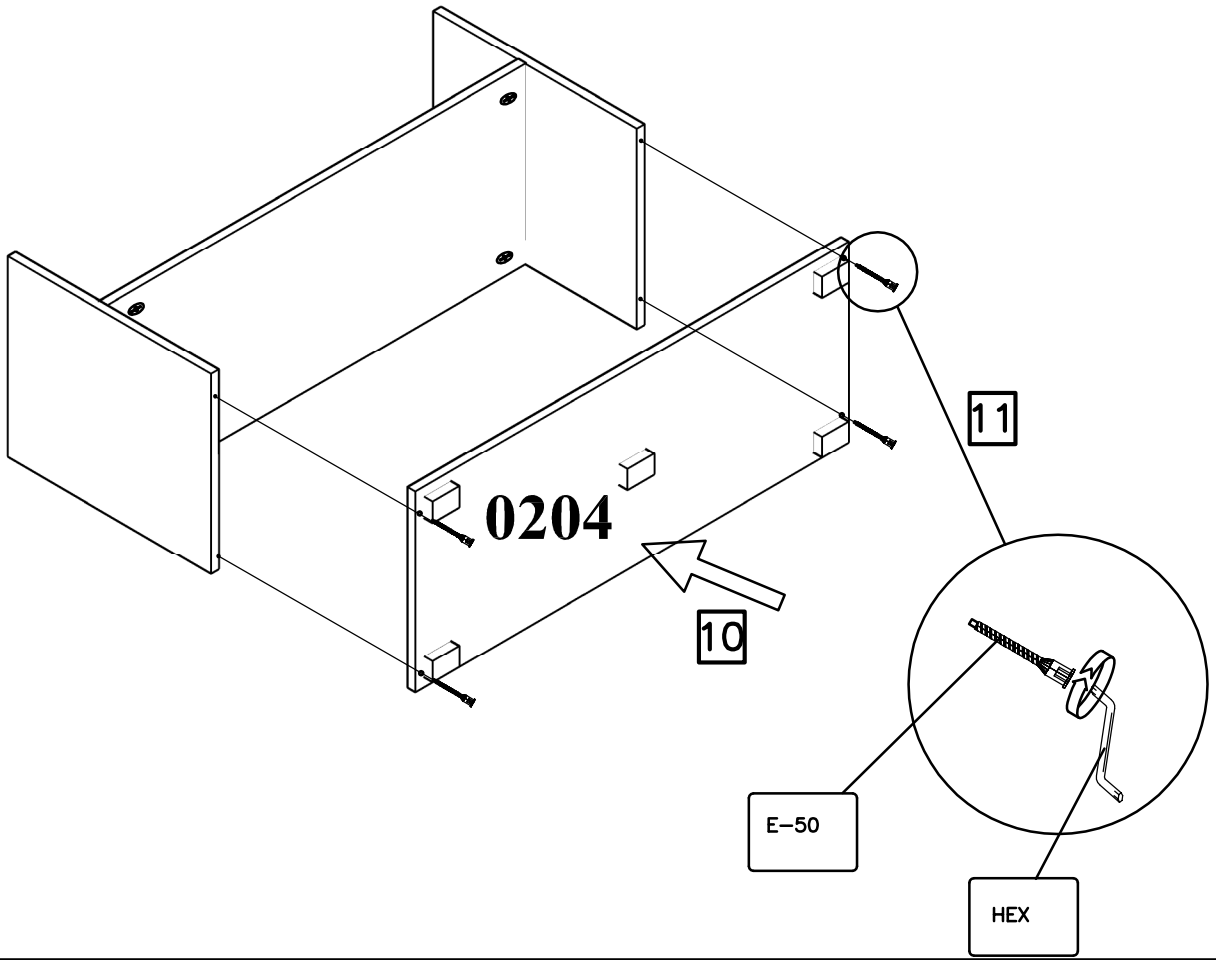
0204
10
11
E–50
HEX

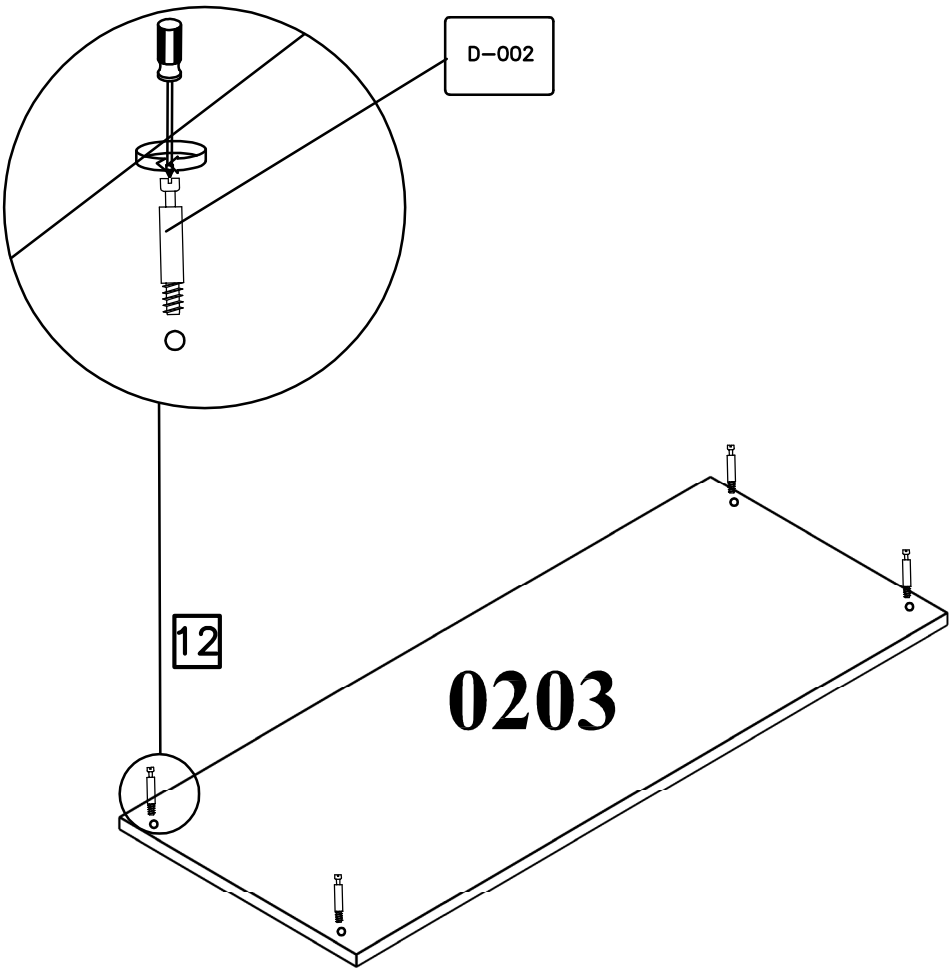
D–002
12
0203

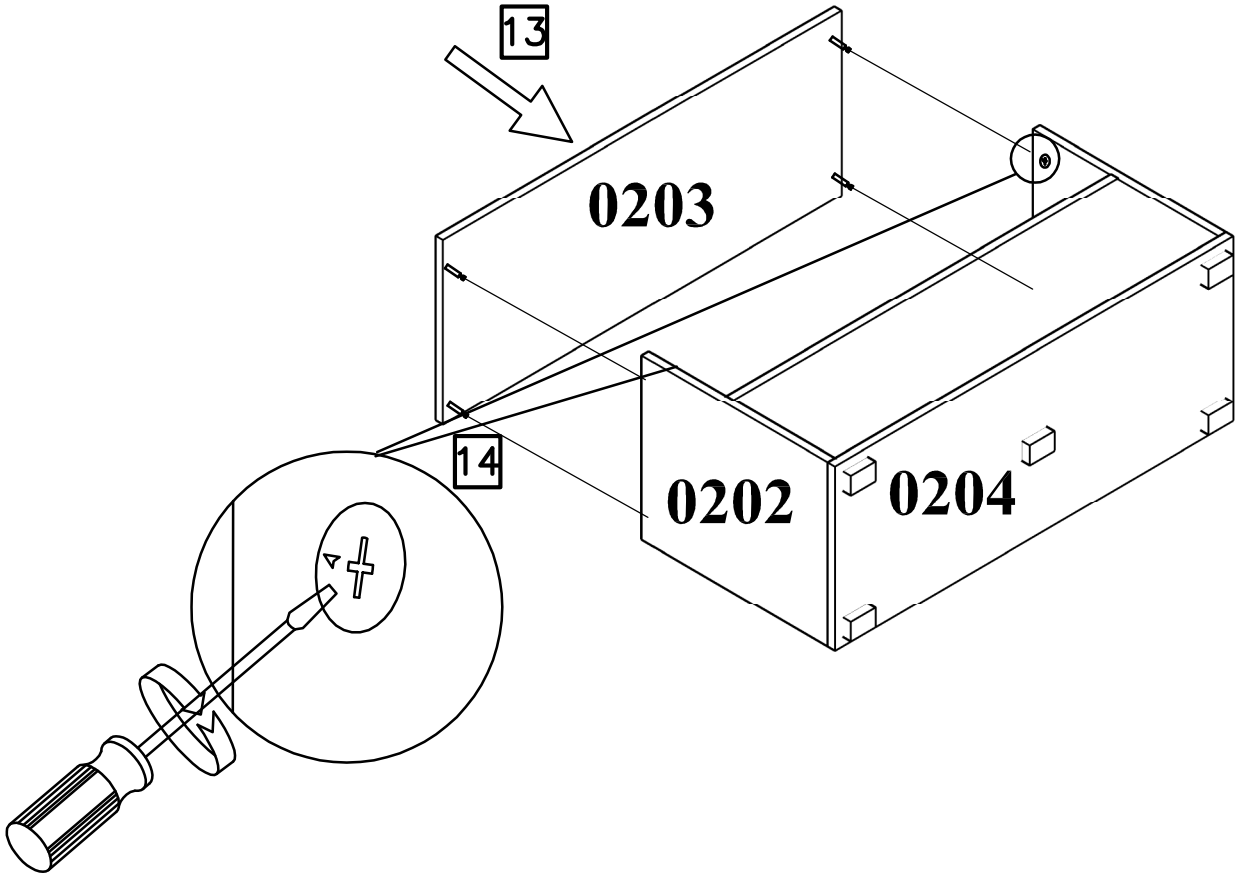
13
0203
14
0202
0204

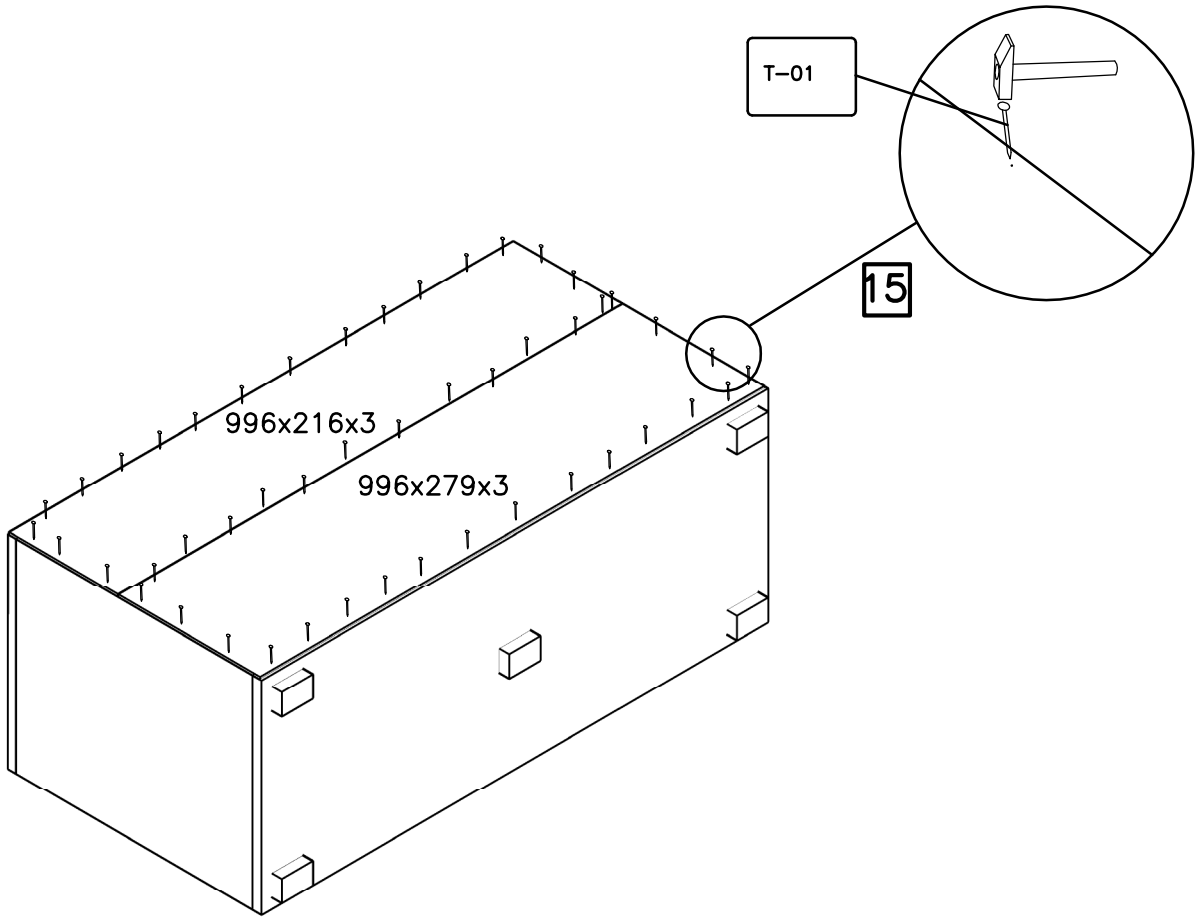
T-01
15
996x216x3
996x279x3

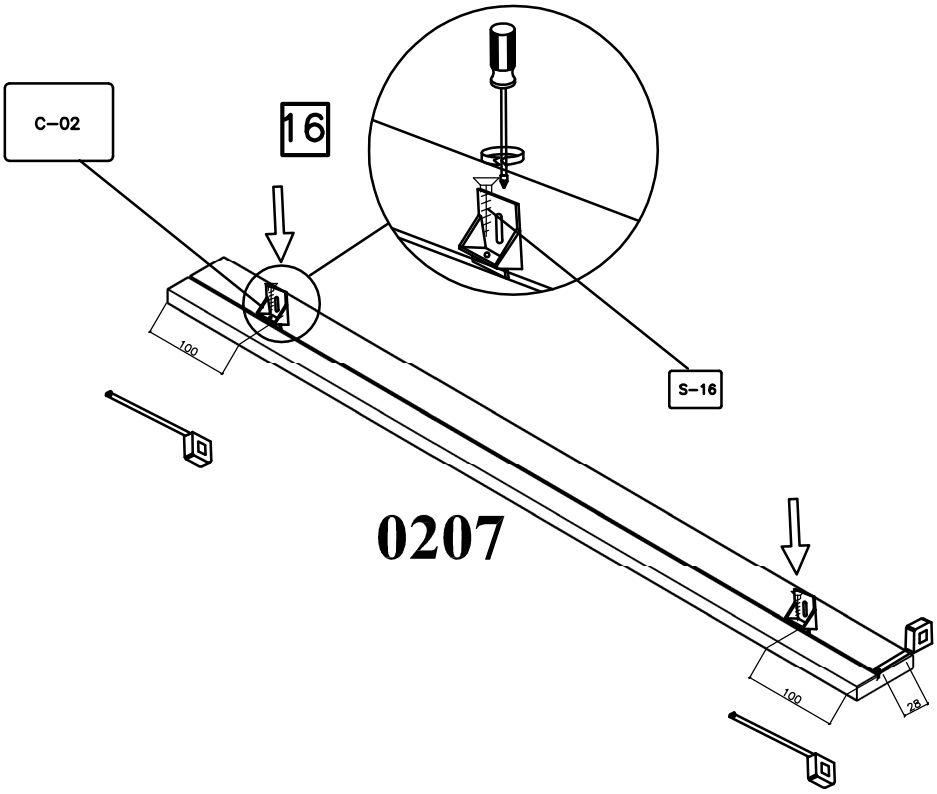
C–02
16
S–16
100
100
28
0207

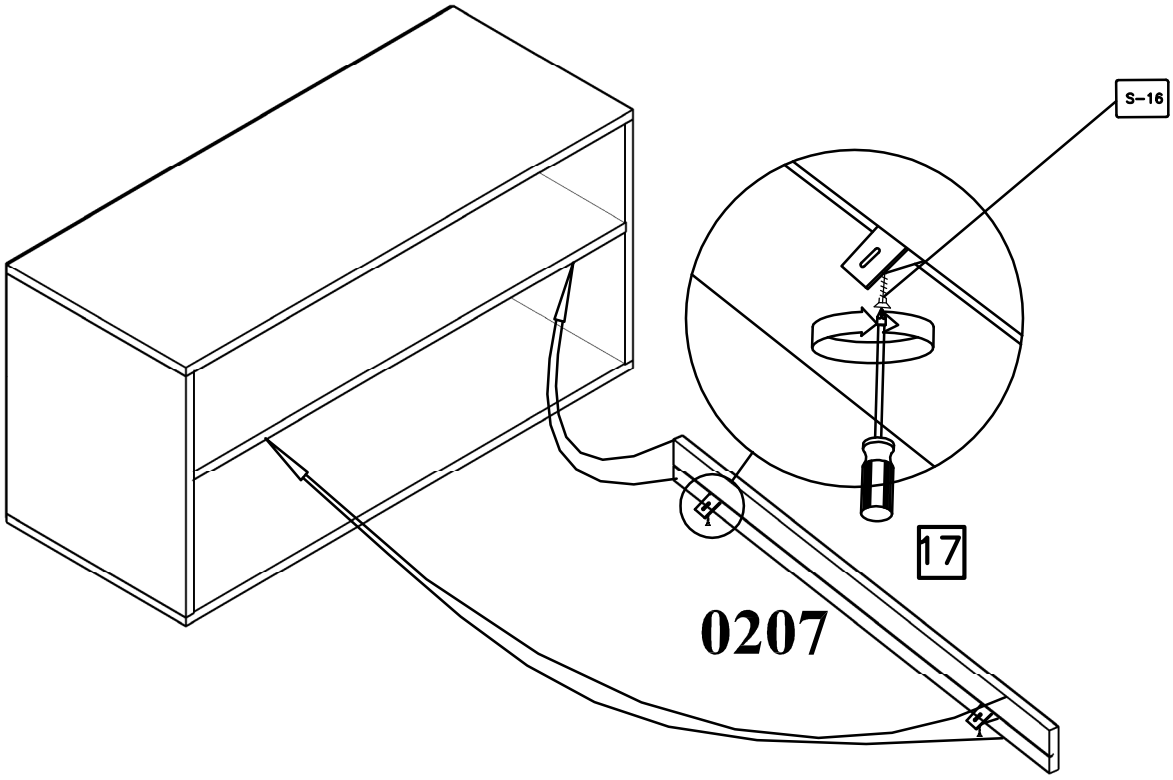
S–16
17
0207

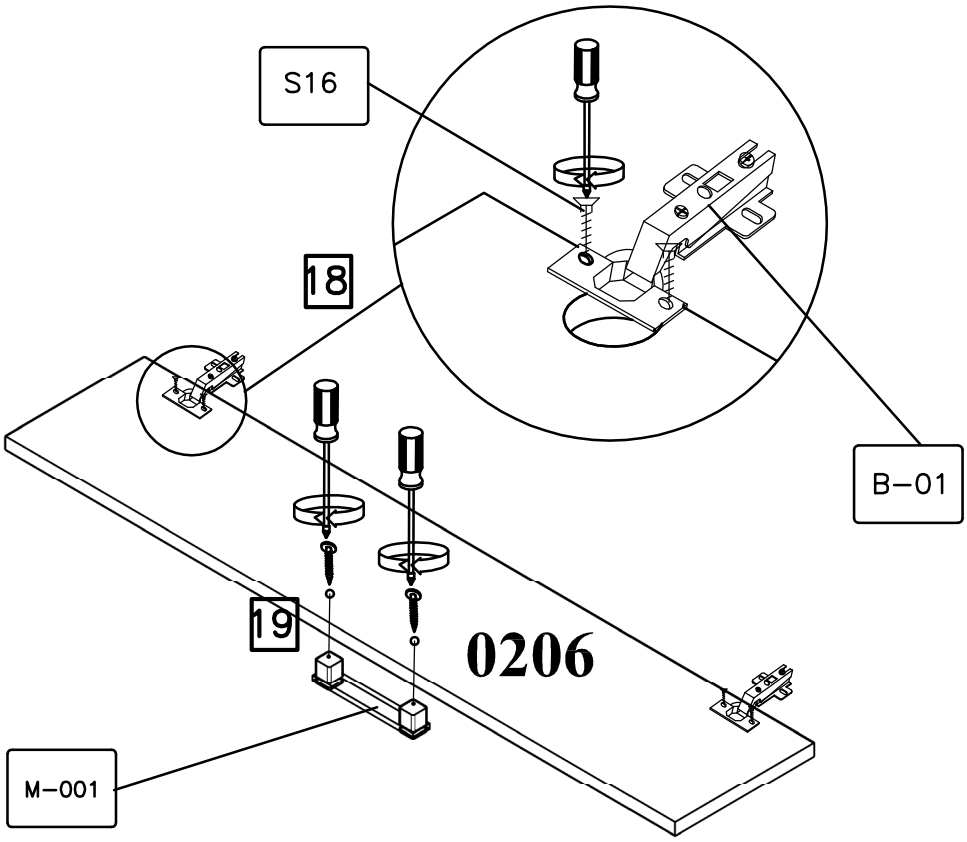
S16
18
B–01
19
0206
M–001

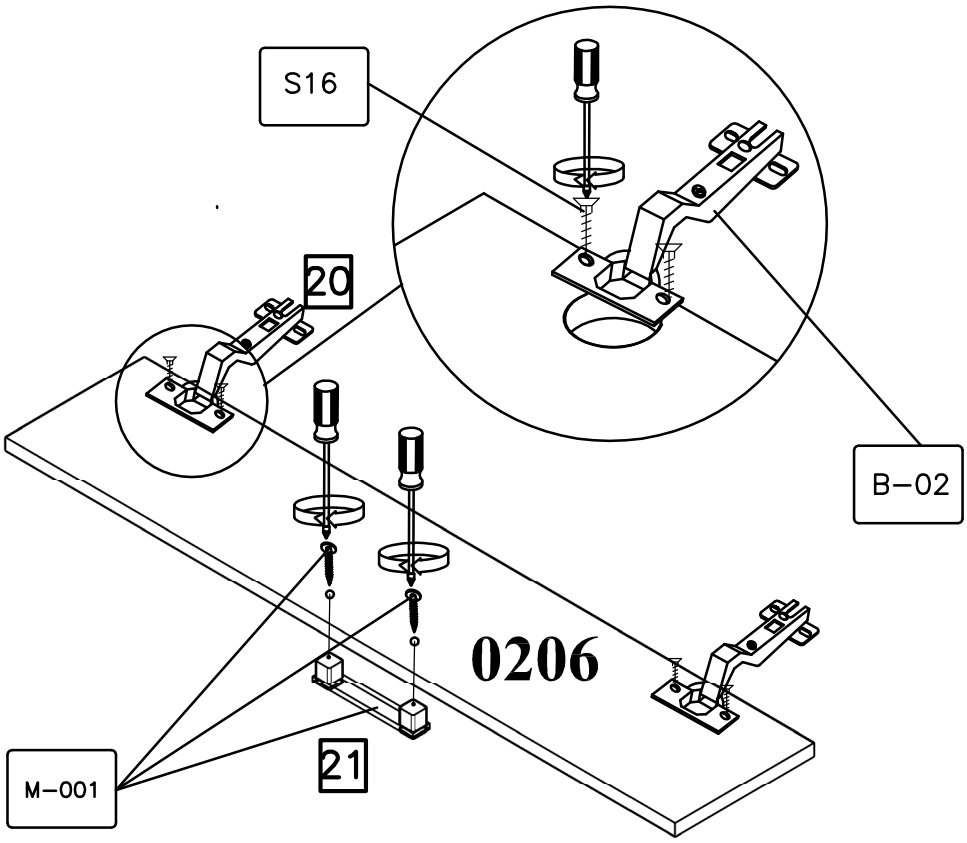
S16
20
B–02
0206
M–001
21

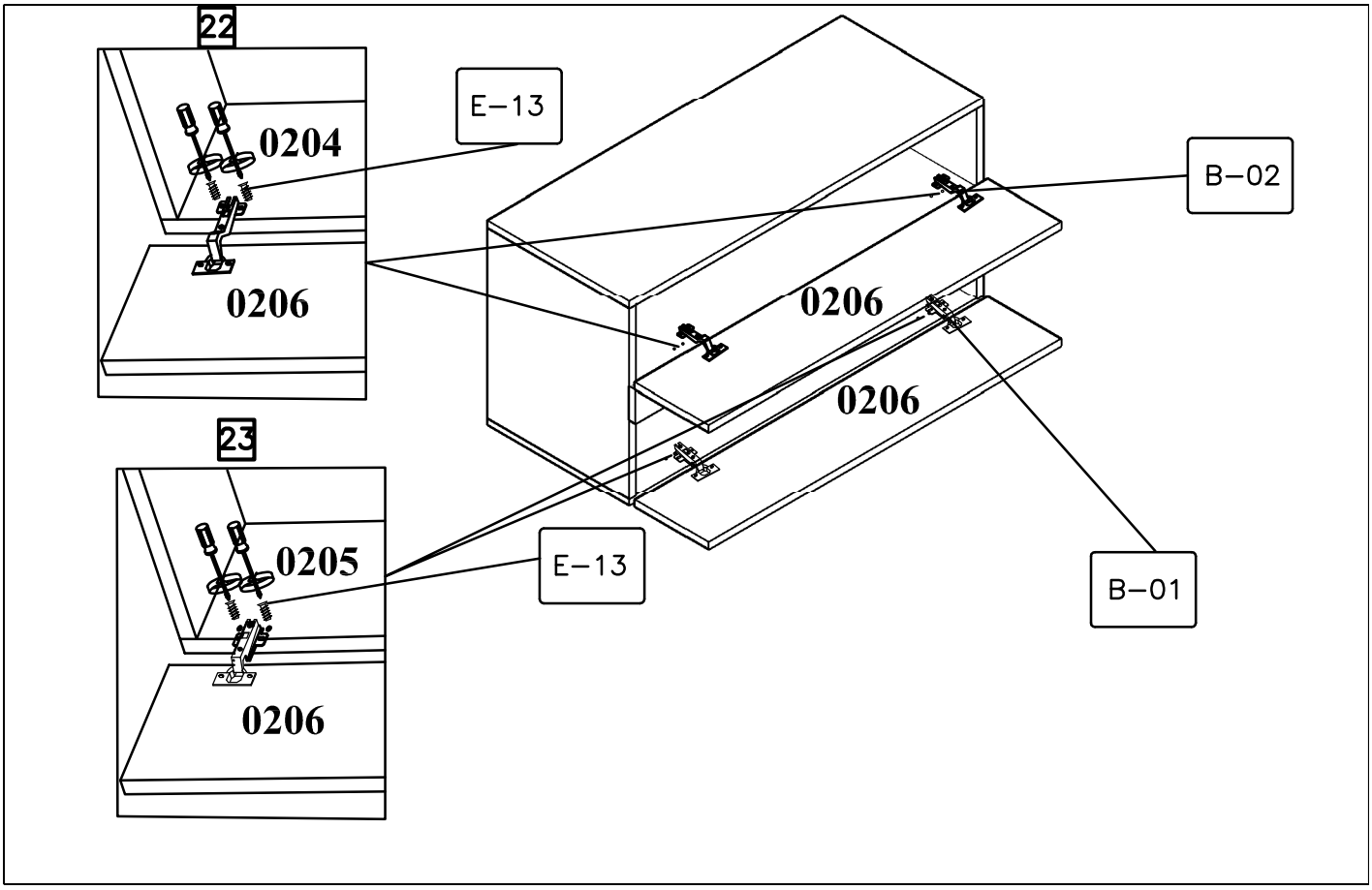
22
0204
0206
E-13
B-02
0206
0206
23
0205
E-13
0206
B-01

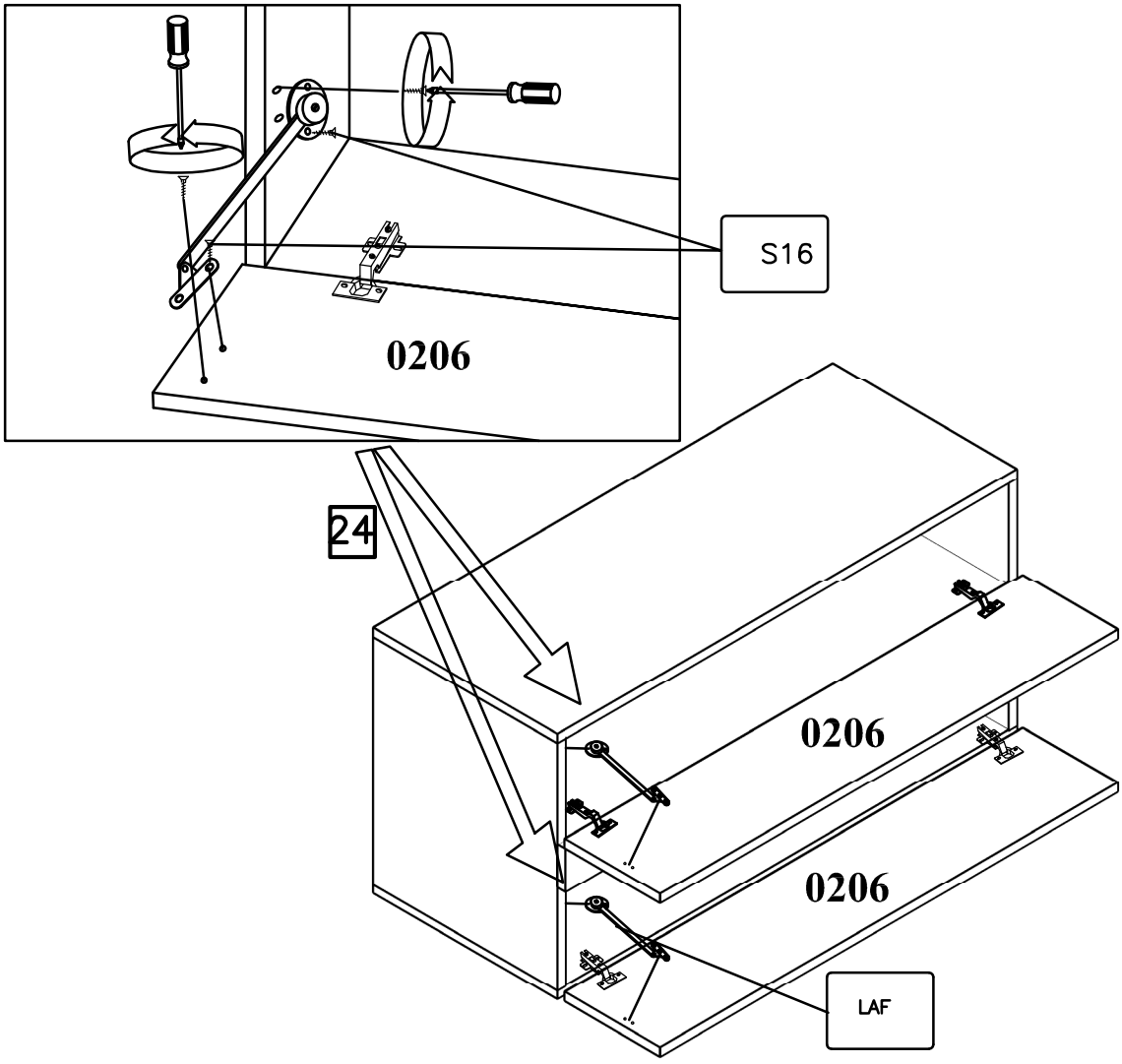
S16
0206
24
0206
0206
LAF

PRODUCT : ANIA – Item with shelf

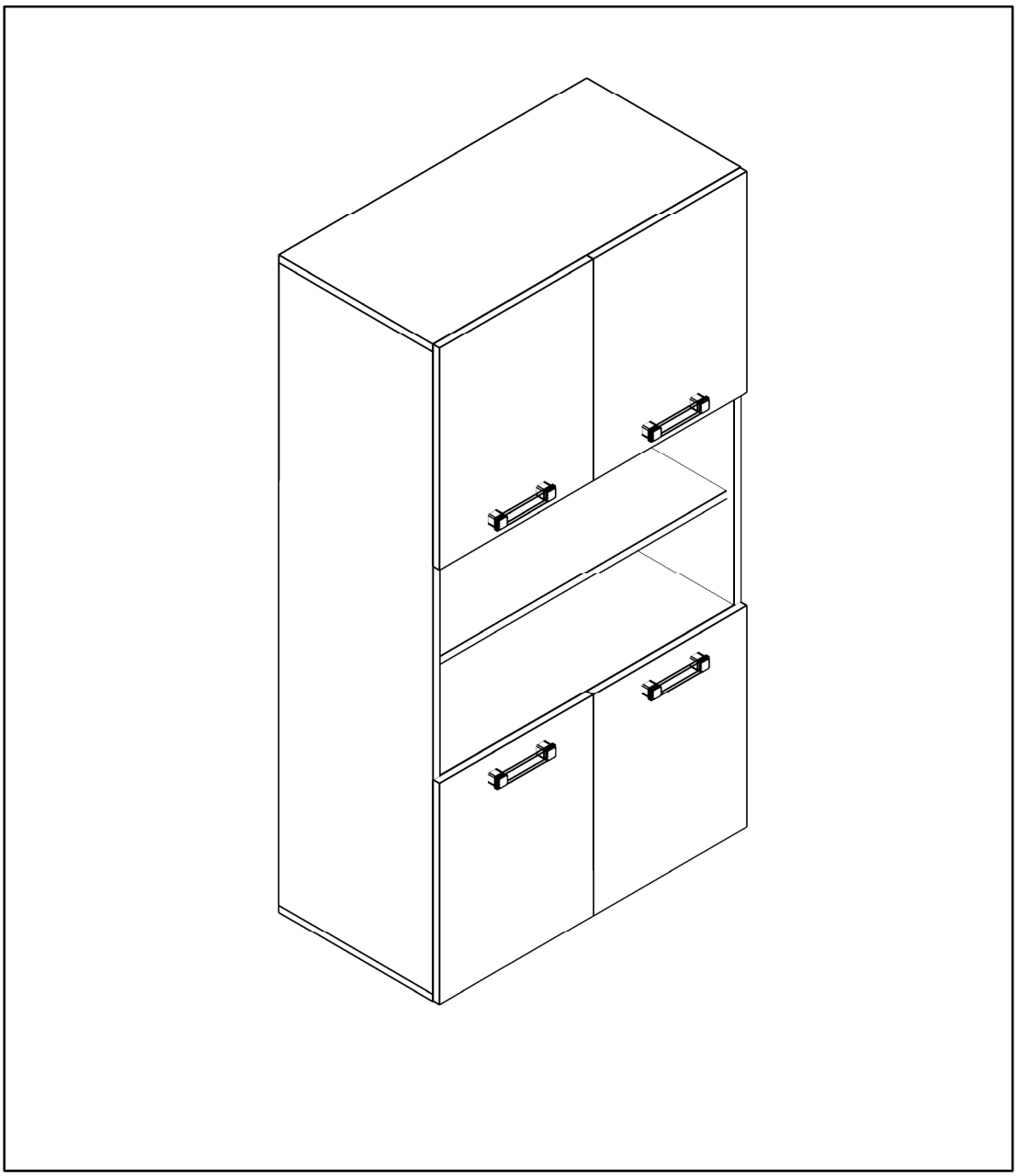

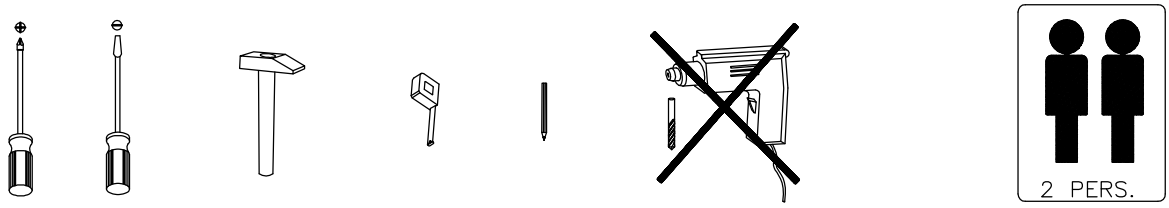

801x400x16

0303

498x398x16

0308

1450x400x16

0301

1450x400x16

0302

498x398x16

0307

498x398x16

0307

498x398x16

0308

768x380x16

0306

801x400x16

0304

768x400x16

0305

768x400x16

0305

490x398x3

490x398x3

490x398x3

490x398x3

796x248x3

796x248x3

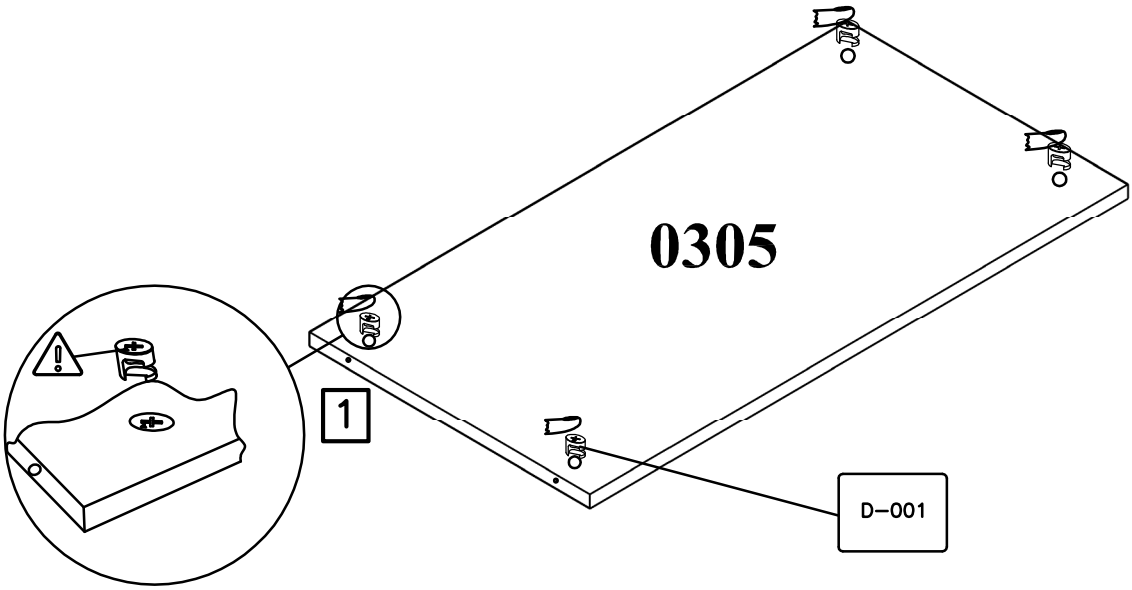
0305
1
D–001

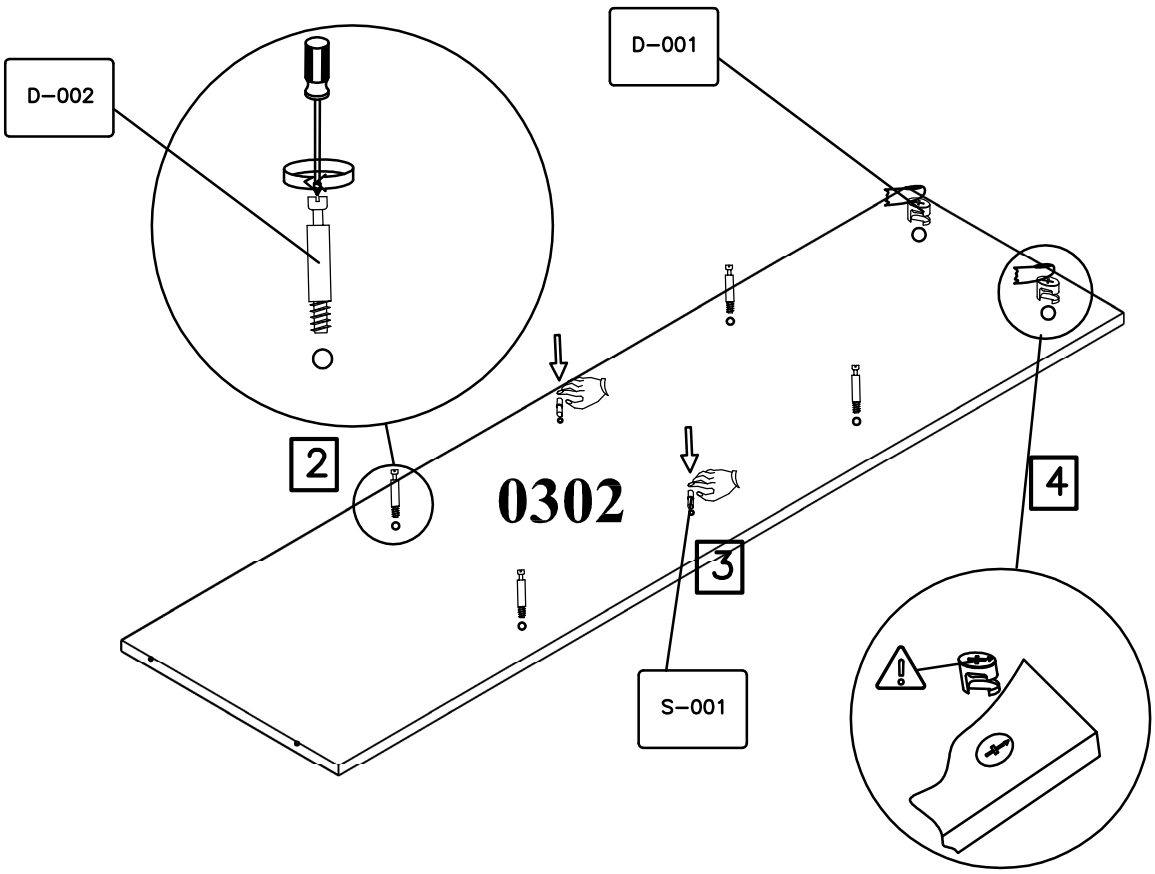
D–002
D–001
2
0302
3
4
S–001

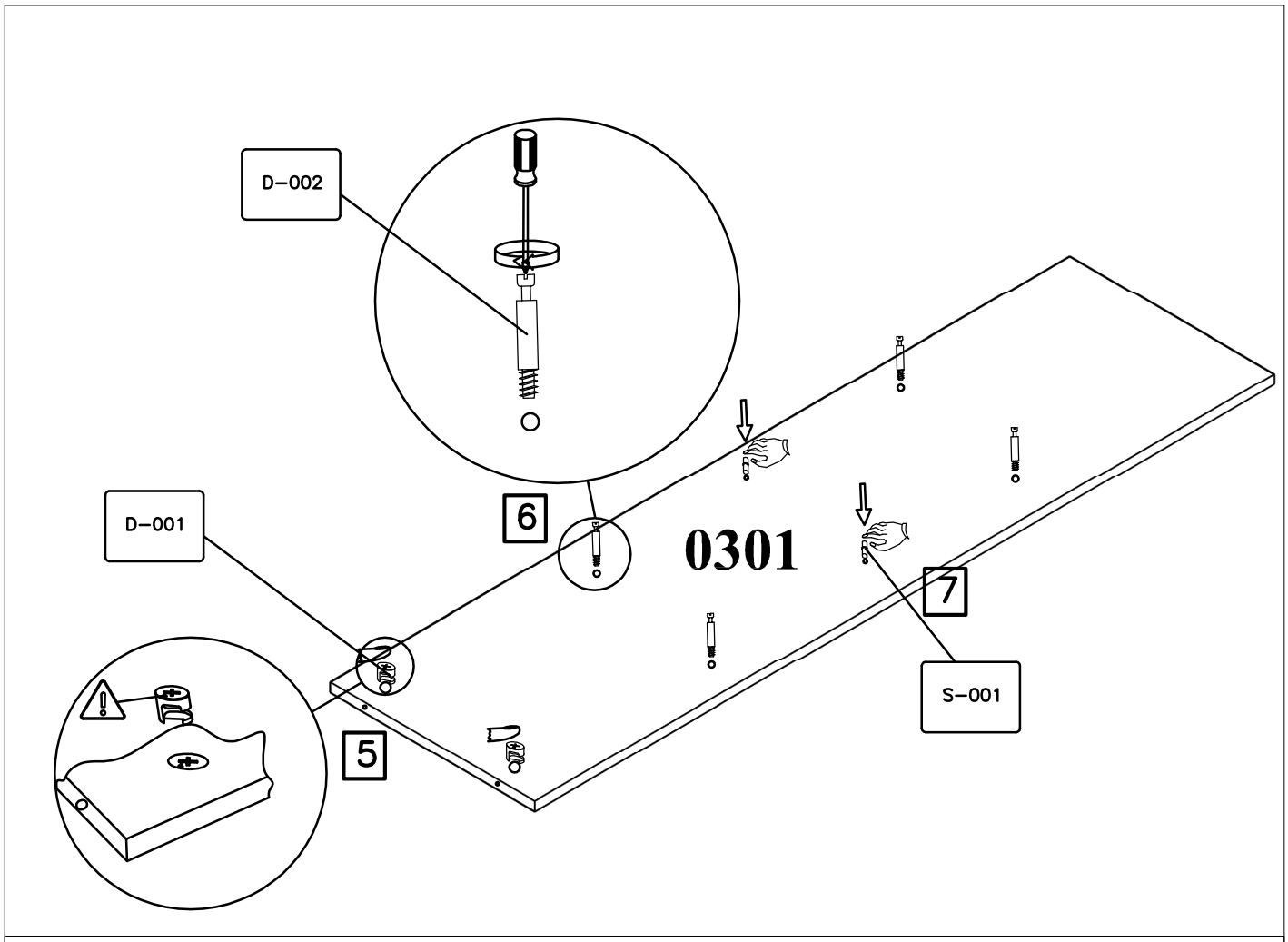
D–002
D–001
6
0301
7
S–001
5

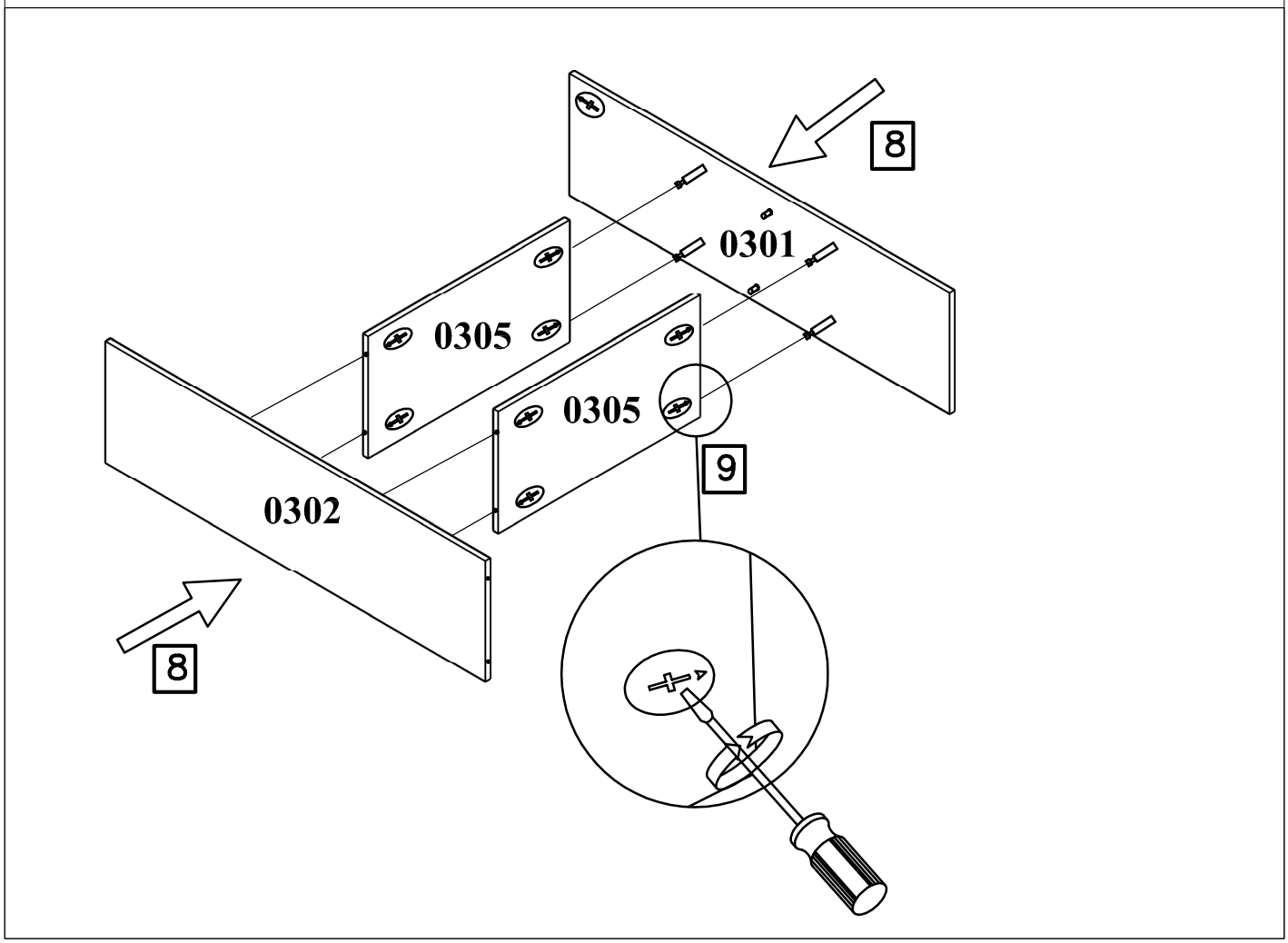
8
0301
0305
0305
9
0302
8

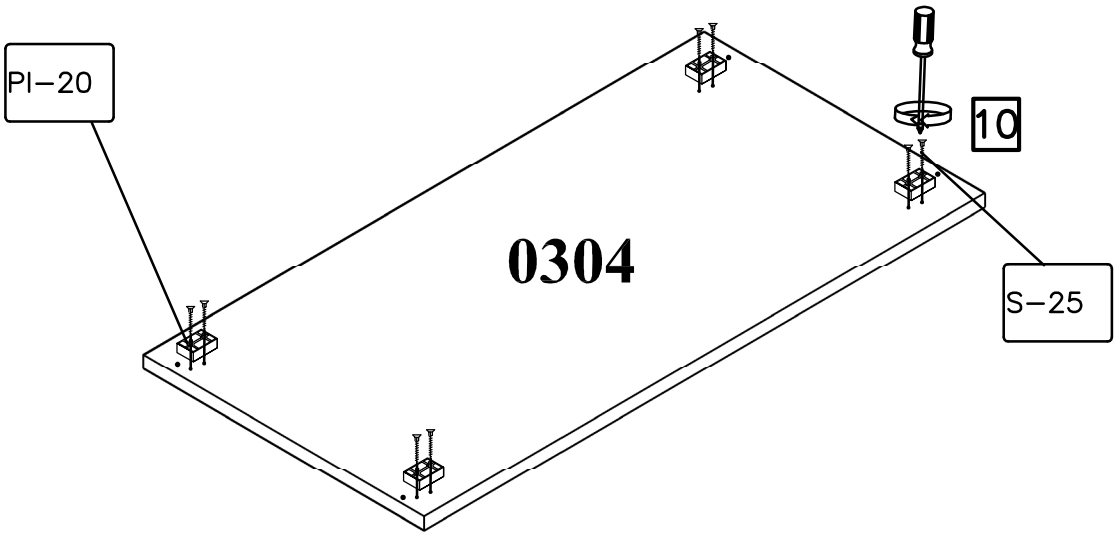
PI–20
0304
10
S–25

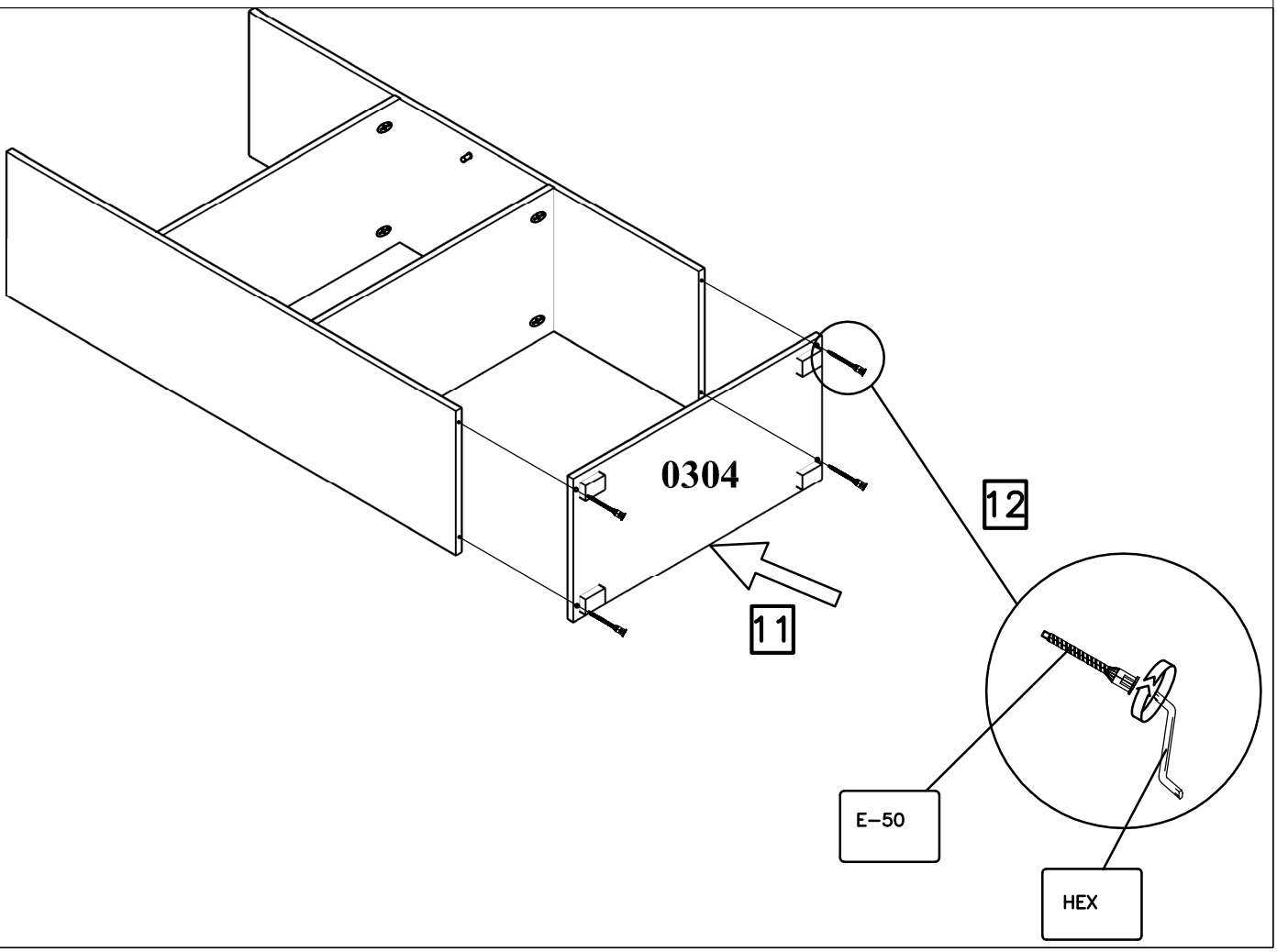
0304
12
11
E–50
HEX

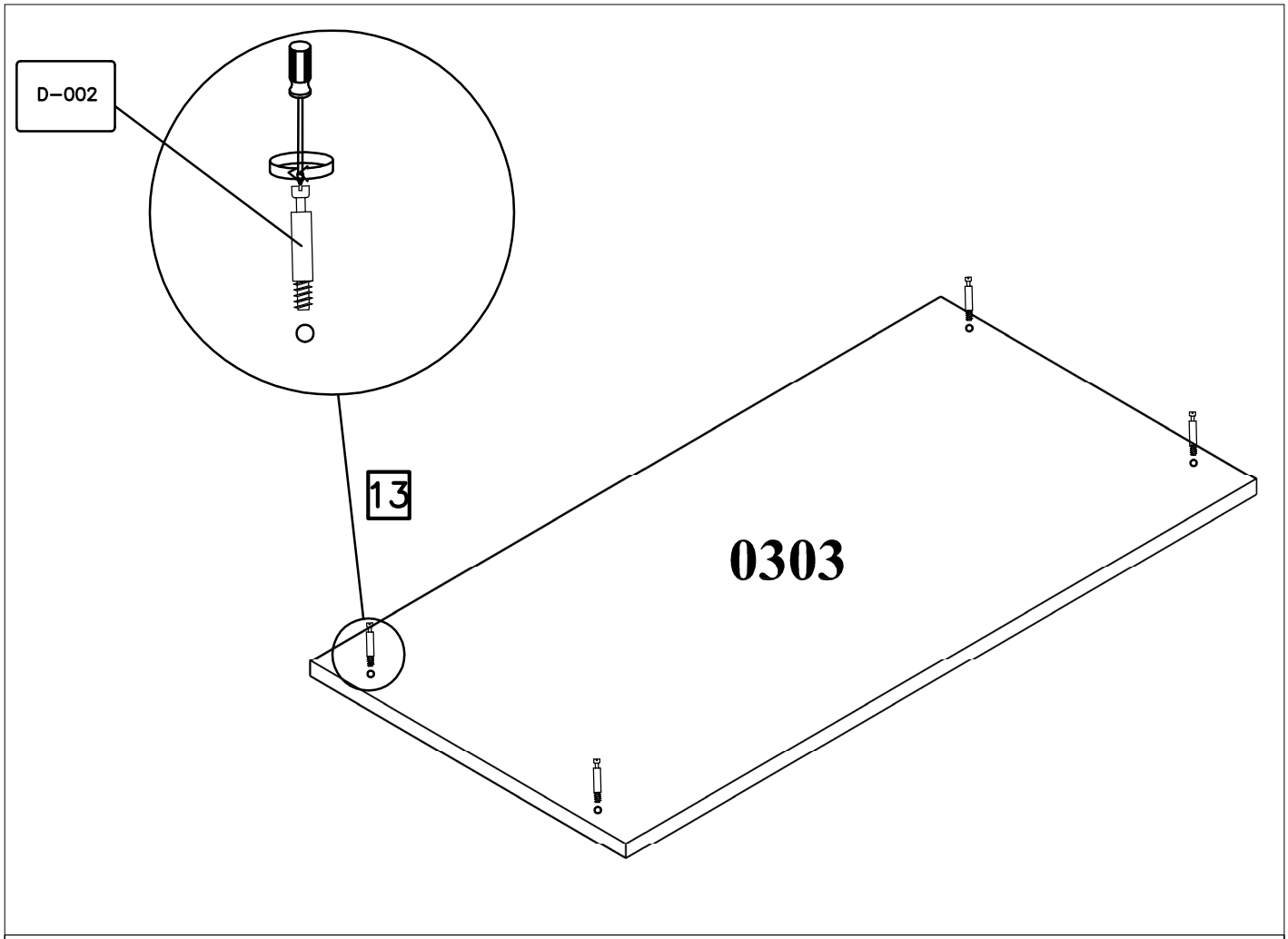
D-002
13
0303

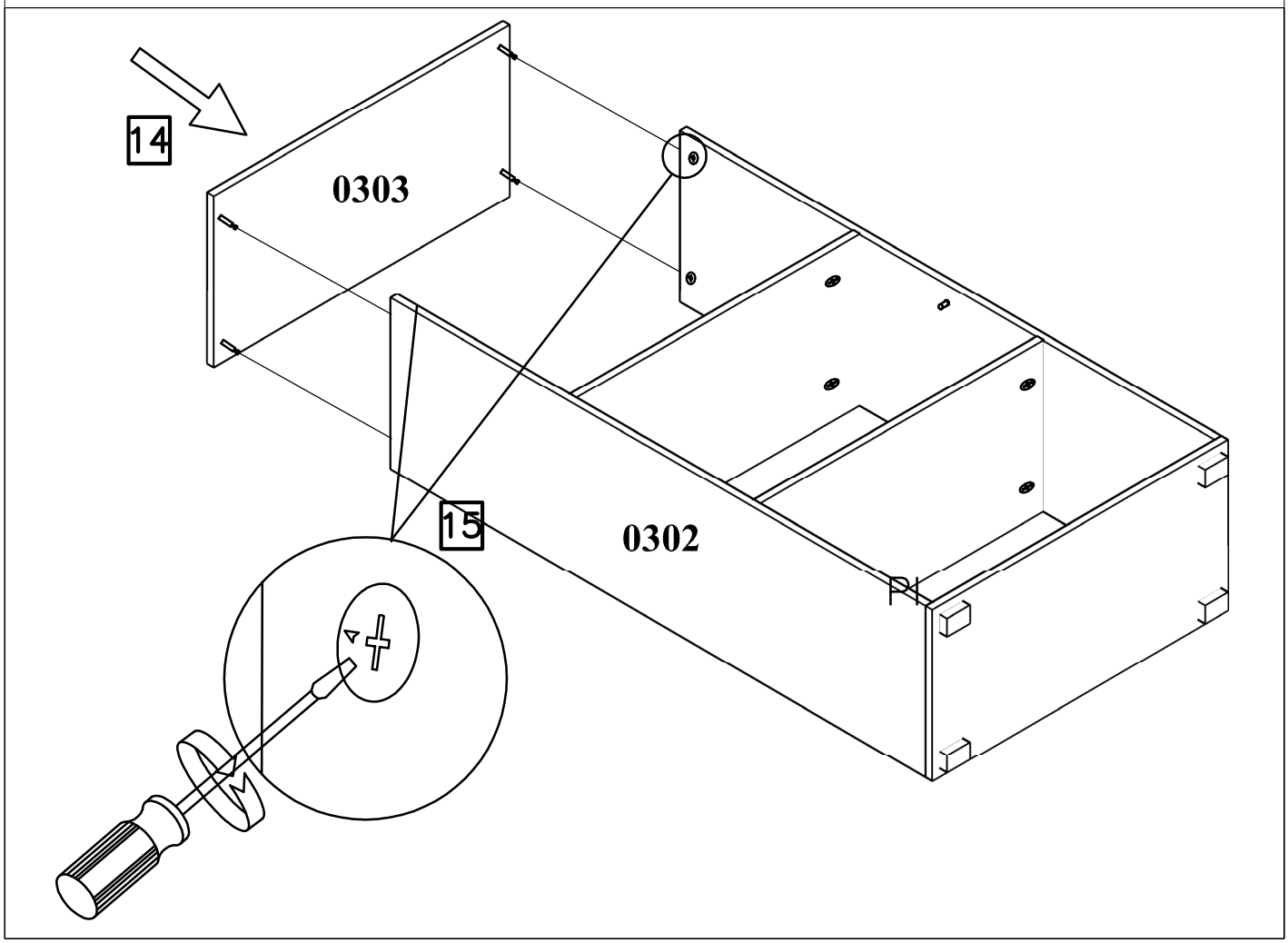
14
0303
15
0302

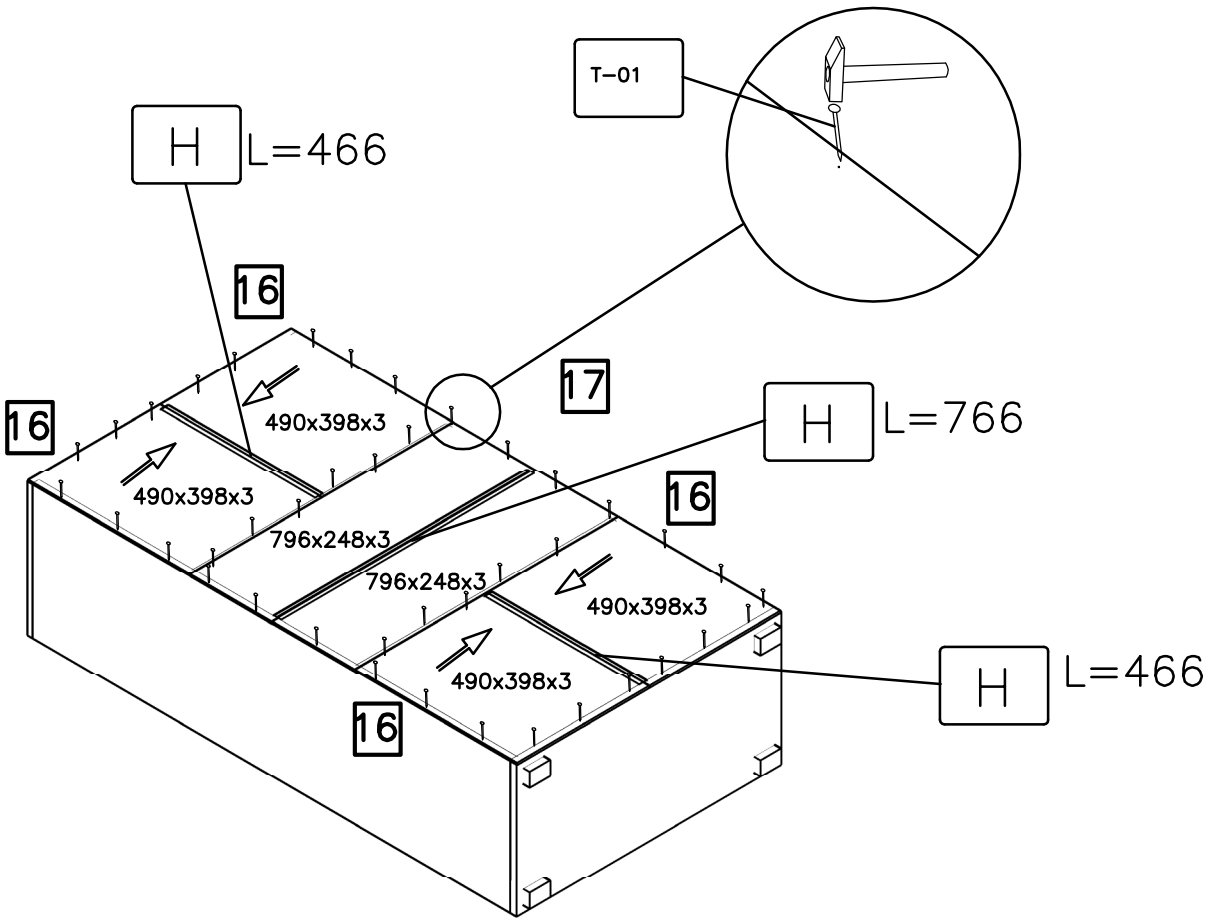
T-01
H
L=466
16
17
H
L=766
16
490x398x3
490x398x3
796x248x3
796x248x3
490x398x3
490x398x3
H
L=466
16

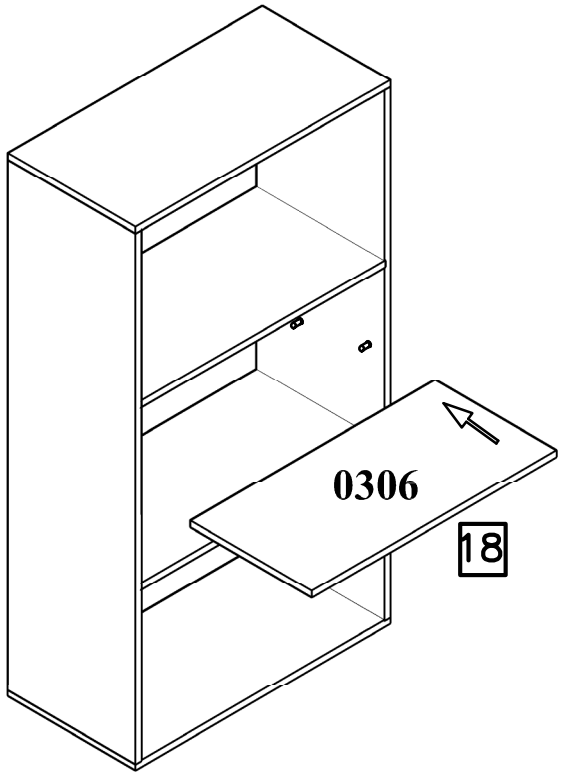
0306
18

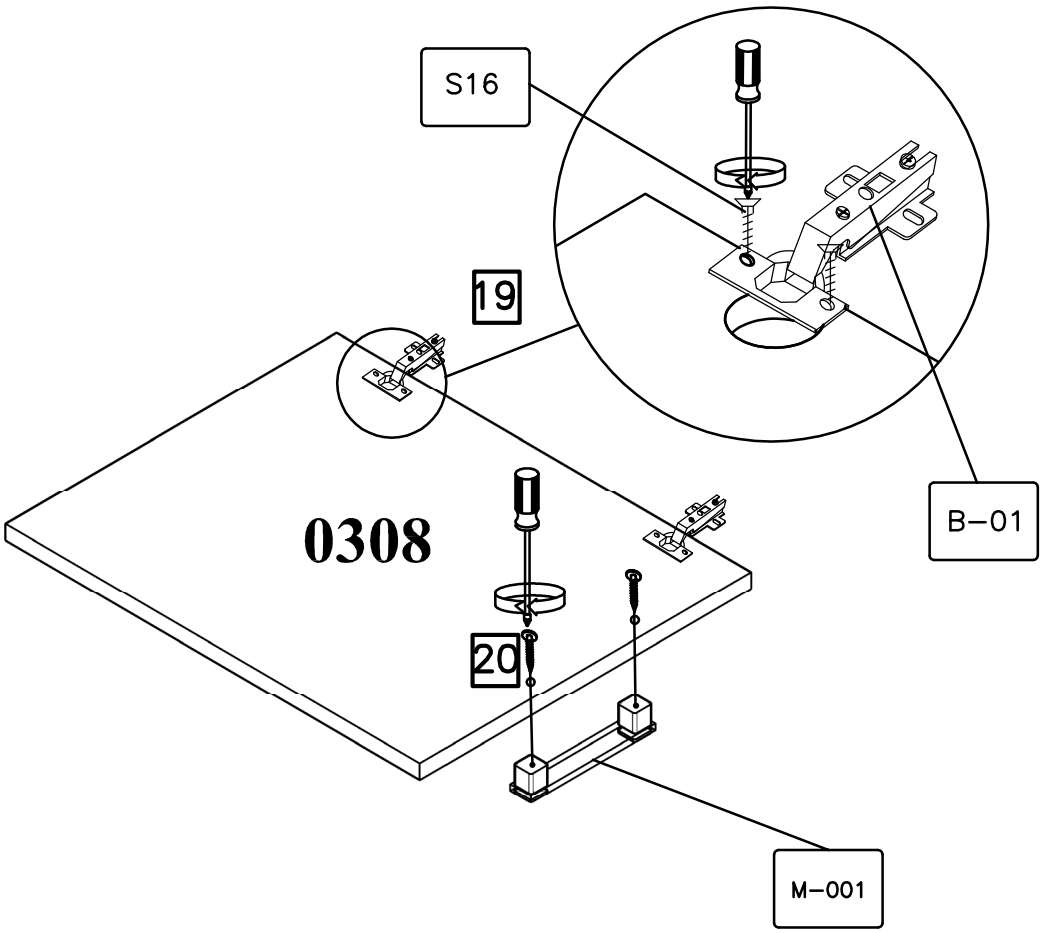
S16
19
0308
20
B–01
M–001

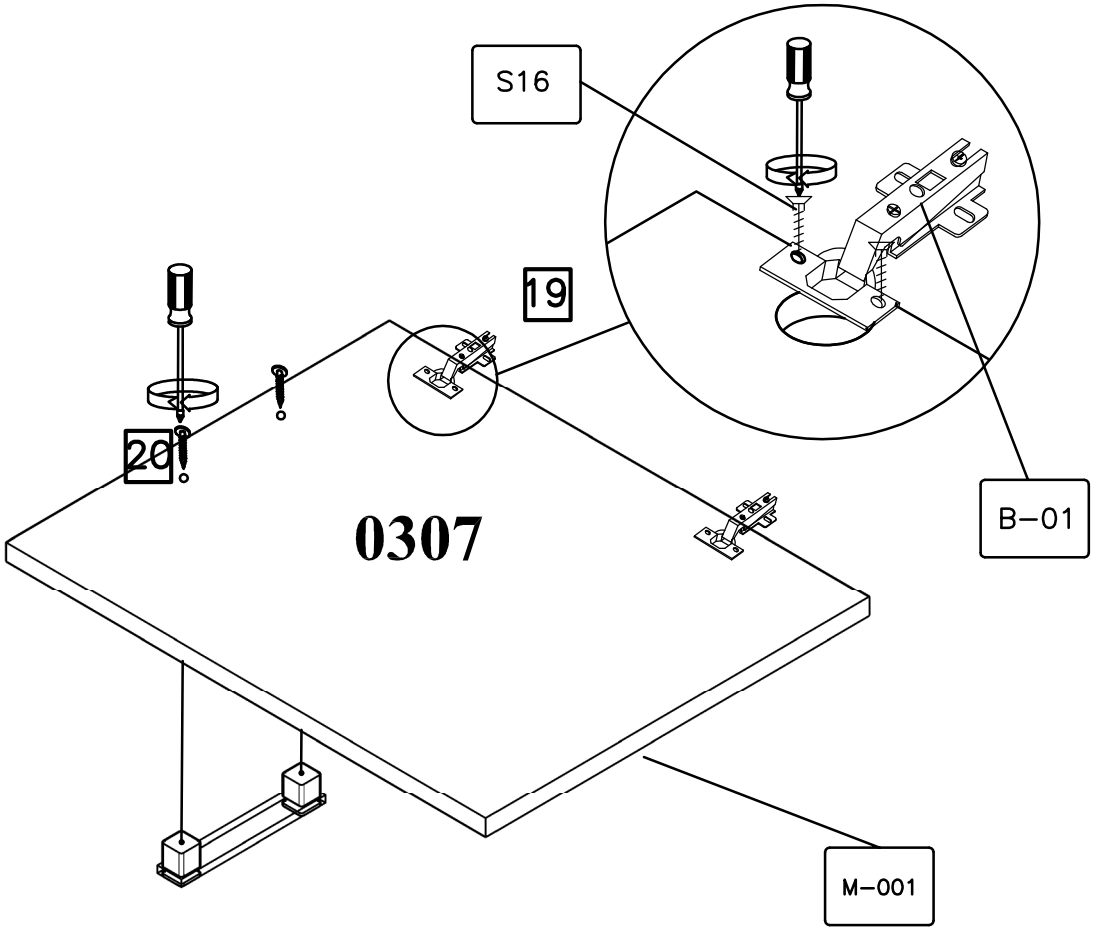
S16
19
20
0307
B–01
M–001

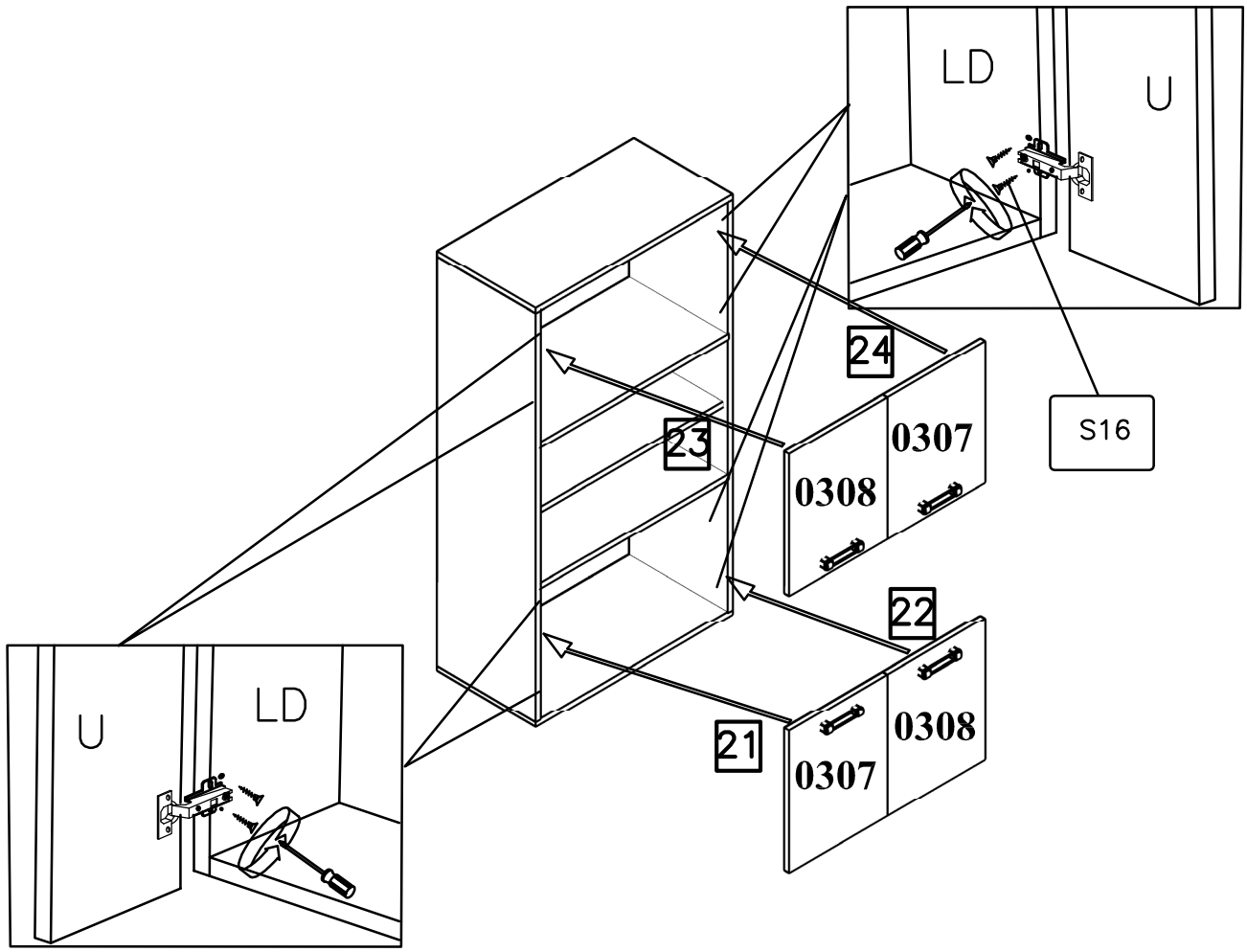
LD
U
24
S16
23
0307
0308
22
U
LD
21
0308
0307

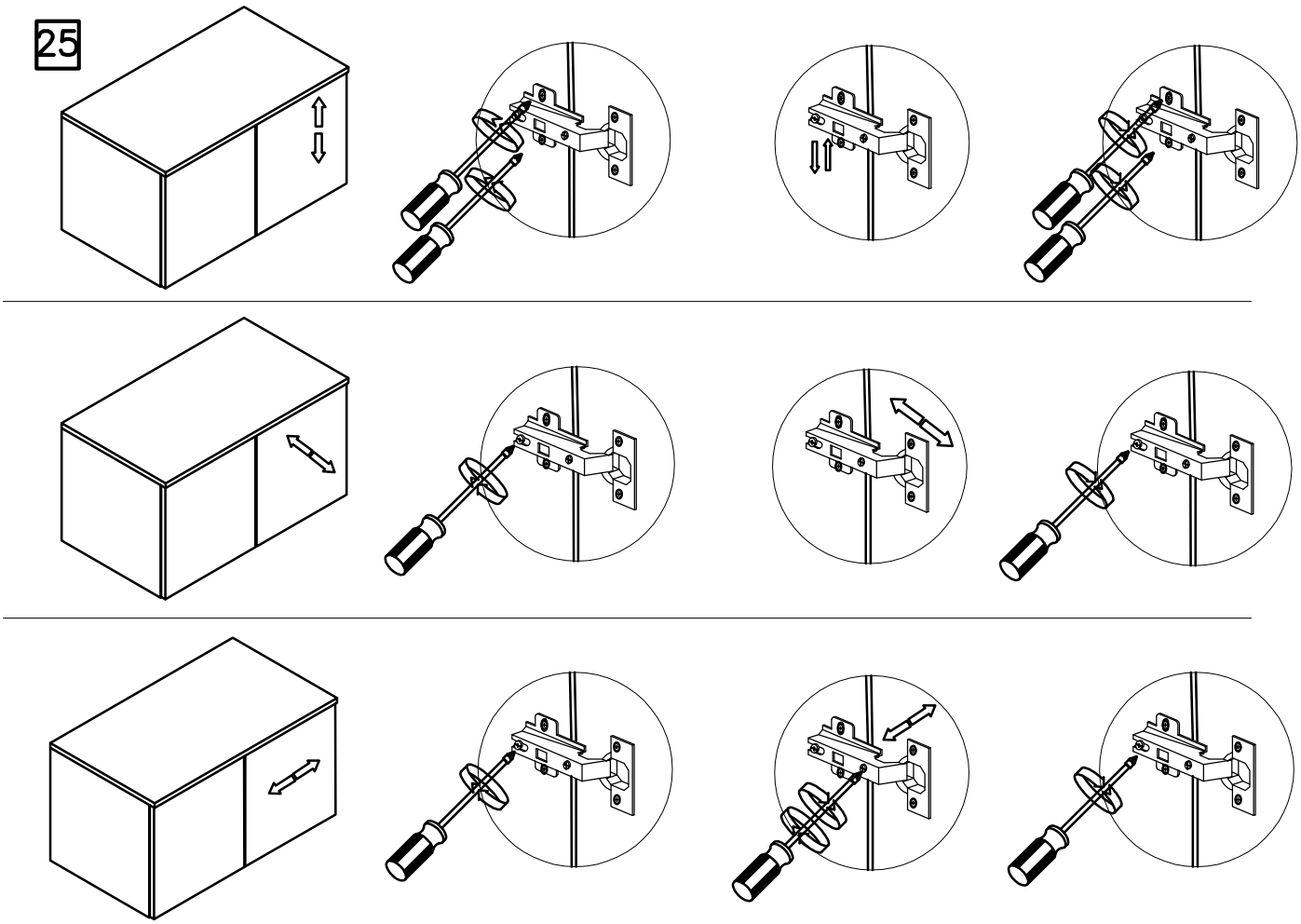
25

PRODUCT : ANIA – Shelf

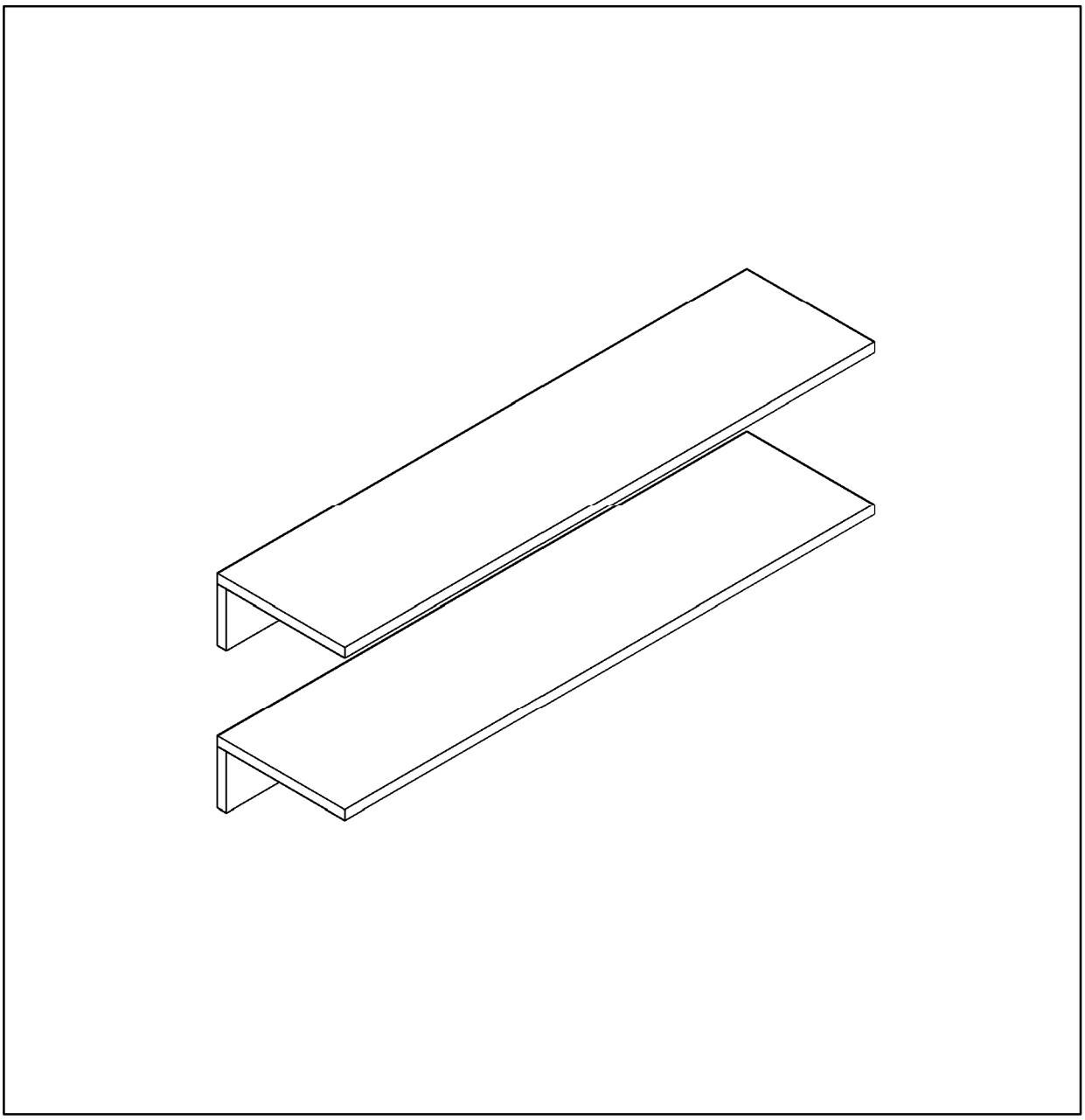

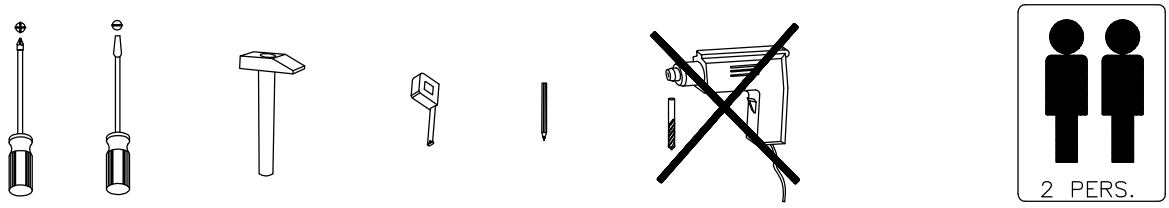

1000x240x16

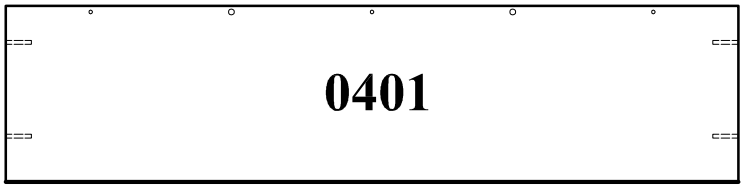

1000x240x16

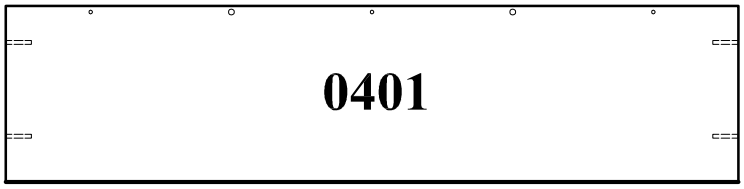

1000x101x16

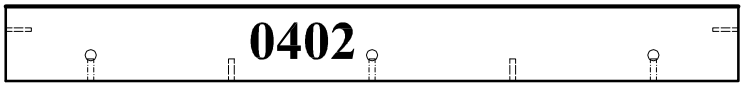

1000x101x16

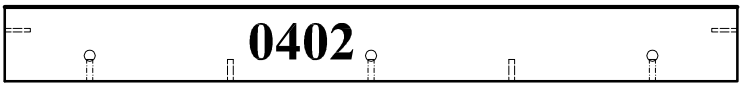

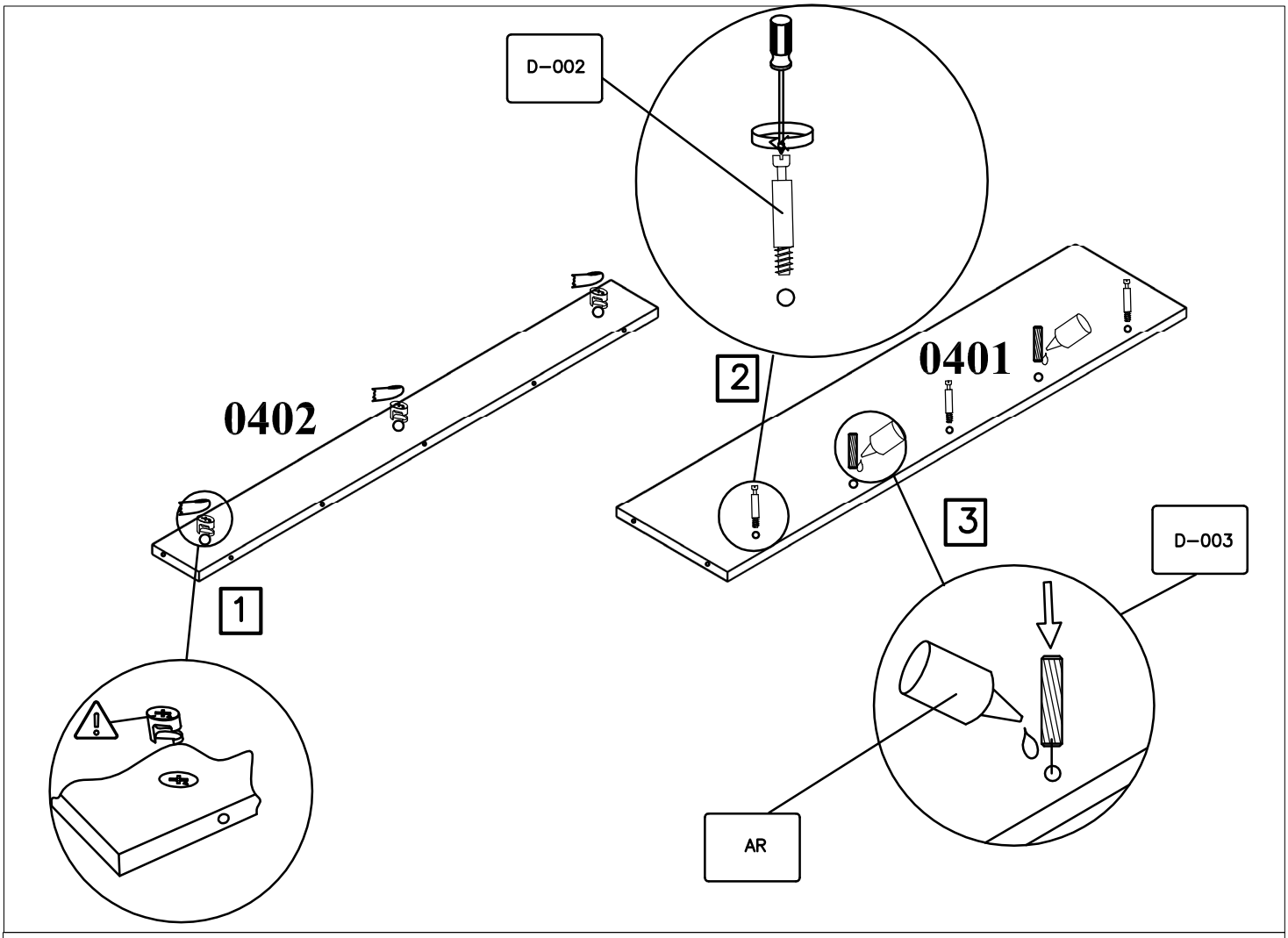
D–002
0402
0401
1
2
3
D–003
AR

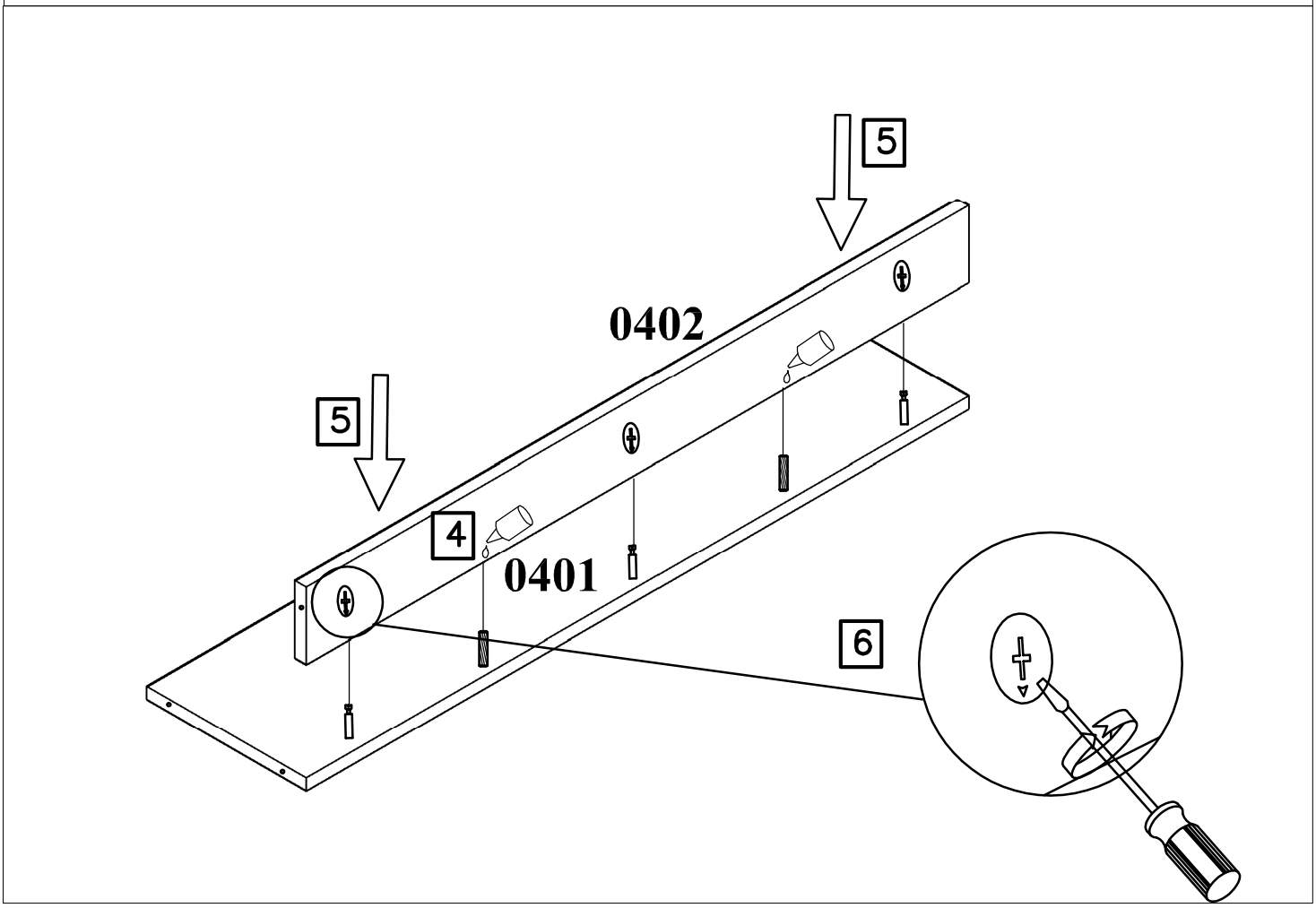
5
0402
5
4
0401
6

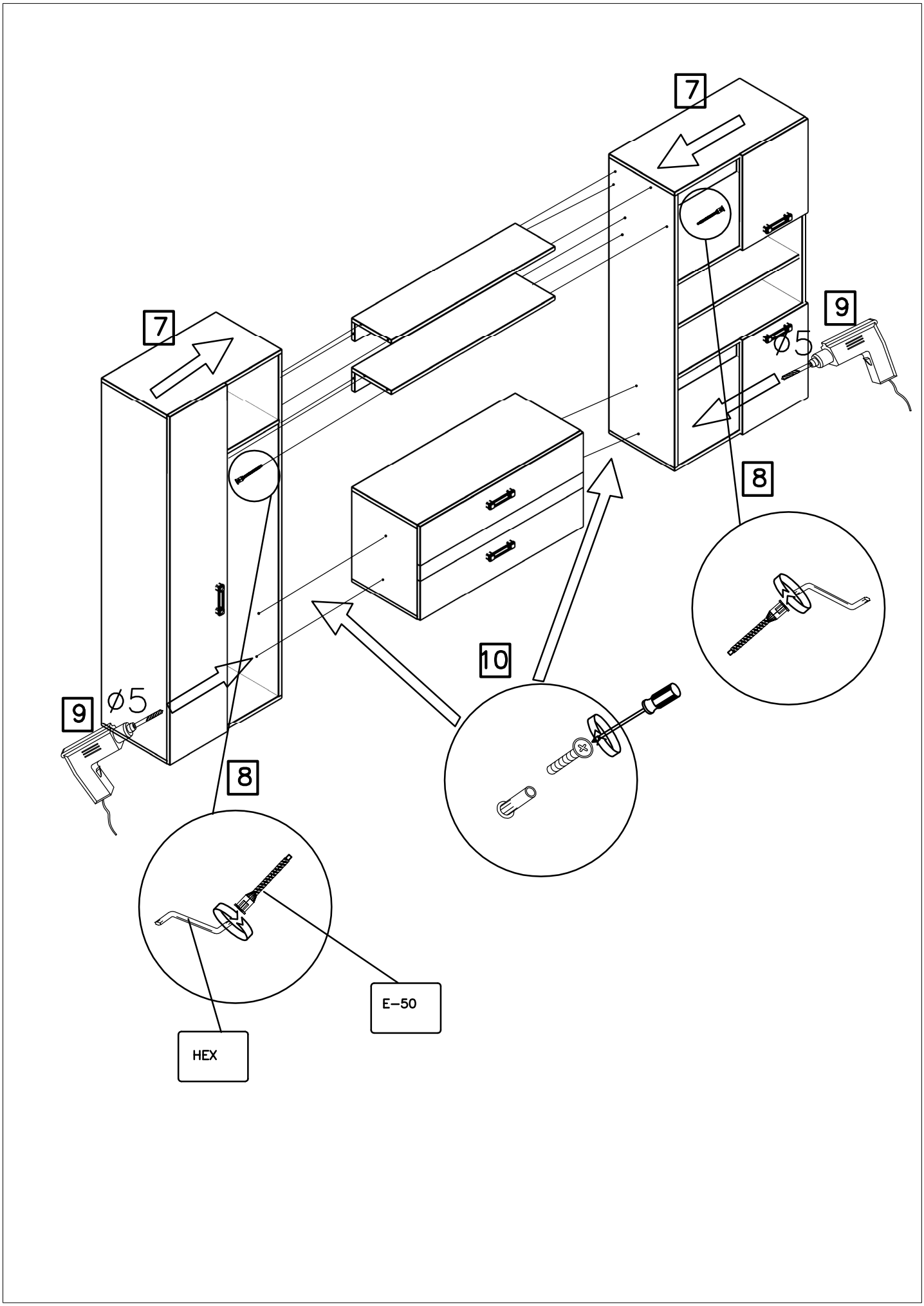
7
7
9
Ø5
9
Ø5
8
8
10
E–50
HEX