Instructiune de montare

Assembly instructions

PRODUS : DULAP D3 – DORMITOR RAUL

PRODUCT : WARDROBE D3 – BEDROOM RAUL

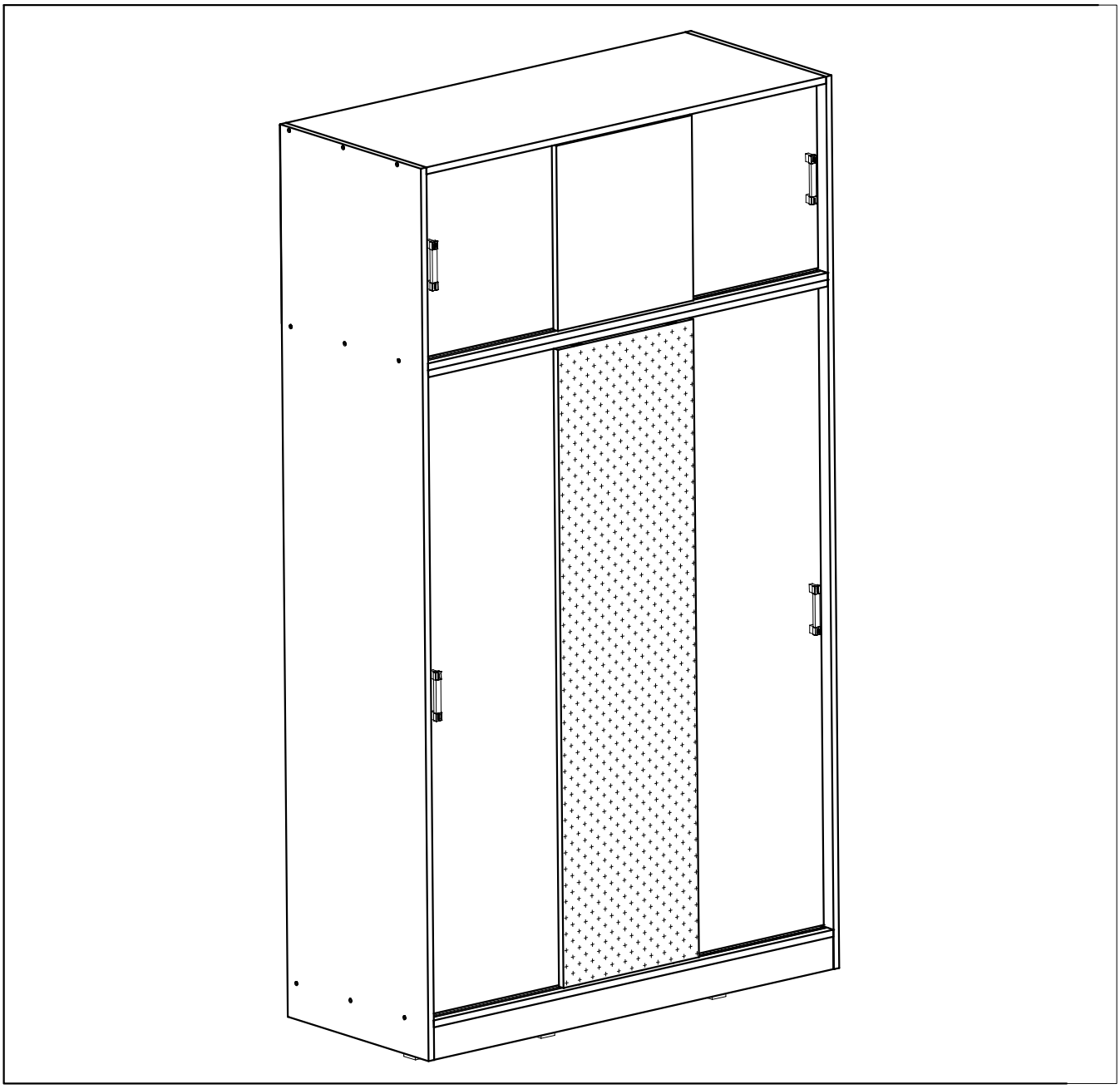

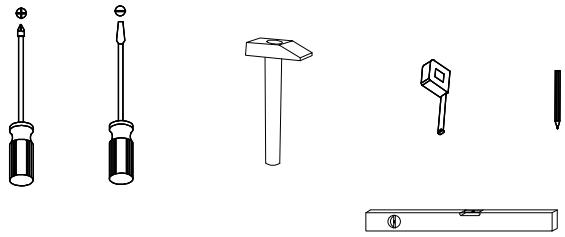

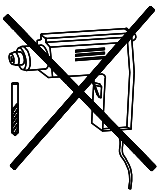

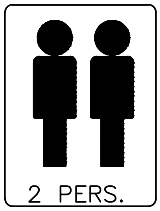

## ENG Dear customer,

– As a furniture producer we would like to inform you that a wall fixing furniture can be good only if the connection between fixing material (plugs) and the wall is better. For the suspended items check the wall and use only apropriate type of dowels (brick, BCA, plasterboard,etc.) purchased from a specialty store.
–Assembler is ultimately responsible for a fixed wall. Installation and laying of electrical items will be made only by qualified personnel and
authorized.
– Follow the description and specification of Charge assembly instructions – in case overload that may occur due to children playing, because people, material or due to other factors – we assume no liability as a manufacturer of furniture.
–O perfect functionality of the furniture is assured only if the settlement this adjusts the horizontal and vertical. Only after that will adjust the doors.
– All screws and removable connection elements will be checked and tightened after 5 to 6 weeks to ensure safety o final fixation.
– Do not use abrasive cleansers
– If not follow the instructions on the use, maintenance or installation, if the products or changes, if changes or used parts that do not meet original pieces, then lose any warranty or claim responsibility of the manufacturer of furniture.

| Incarcari maxime pentru polite in Kg: Maximum weight in Kg Shelf | | | | | | | |
|---|---|---|---|---|---|---|---|
| Grosime PAL melaminat Thick chipboard | | | | | | | Sticla Glass |
| Lungime Length | mm | 16 | 18 | 22 | 25 | 28 | 5 / 6/ 8 |
| 0 ≤ 400 | | 8 kg | 8 kg | 8 kg | 10 kg | 10 kg | Lungime Length >600=5Kg. |
| 401 ≤ 600 | | 6 kg | 6 kg | 6 kg | 6 kg | 6 kg | |
| 601 ≤ 800 | | 5 kg | 5 kg | 5 kg | 5 kg | 5 kg | Lungime Length >1000=2Kg. |
| 801 ≤ 1000 | | 3 kg | 3 kg | 3 kg | 3 kg | 3 kg | |

## RO Stimate client,

In calitate de producator de mobila am dori sa va informam ca o fixare a mobilei de perete poate fi buna doar daca legatura dintre materialul de fixare (dibluri) si perete este buna. In cazul corpurilor suspendate verificati peretele si folositi doar dibluri corspunzatoare tipului de perete (caramida, BCA, rigips,etc.) achizitionate dintr–un magazin de specialitate. In definitiv montatorul este raspunzator de fixarea de perete.
– Montarea si pozarea articolelor electrice se va efectua doar de catre personal calificat si autorizat.
– Respectati descrierea si specificatiile de incarcare din instructiunile de montaj – in caz de supraincarcare ce poate sa apara datorita copiilor care se joaca, datorita persoanelor, materialului sau datorita altor factori – nu ne asumam nici o raspundere ca producator de mobila.
– O functionalitate perfecta a mobilei este asigurata doar in cazul in care la asezare, aceasta se regleaza pe orizontala si verticala. Doar dupa aceasta se vor regla usile.
– Toate suruburile si elementele de imbinare demontabila vor trebui verificate si stranse dupa 5 pana la 6 saptamani pentru a se asigura o siguranta definitiva a fixarii.
– Nu folositi agenti de curatire abrazivi
– In cazul in care nu se respecta instructiunile de utilizare, de deservire sau de montaj, daca se efectueaza modificari ale produselor, daca se schimba piese sau se folosesc piese care nu corespund pieselor originale, atunci se pierde orice garantie sau pretentie de responsabilitate din partea producatorului de mobila.

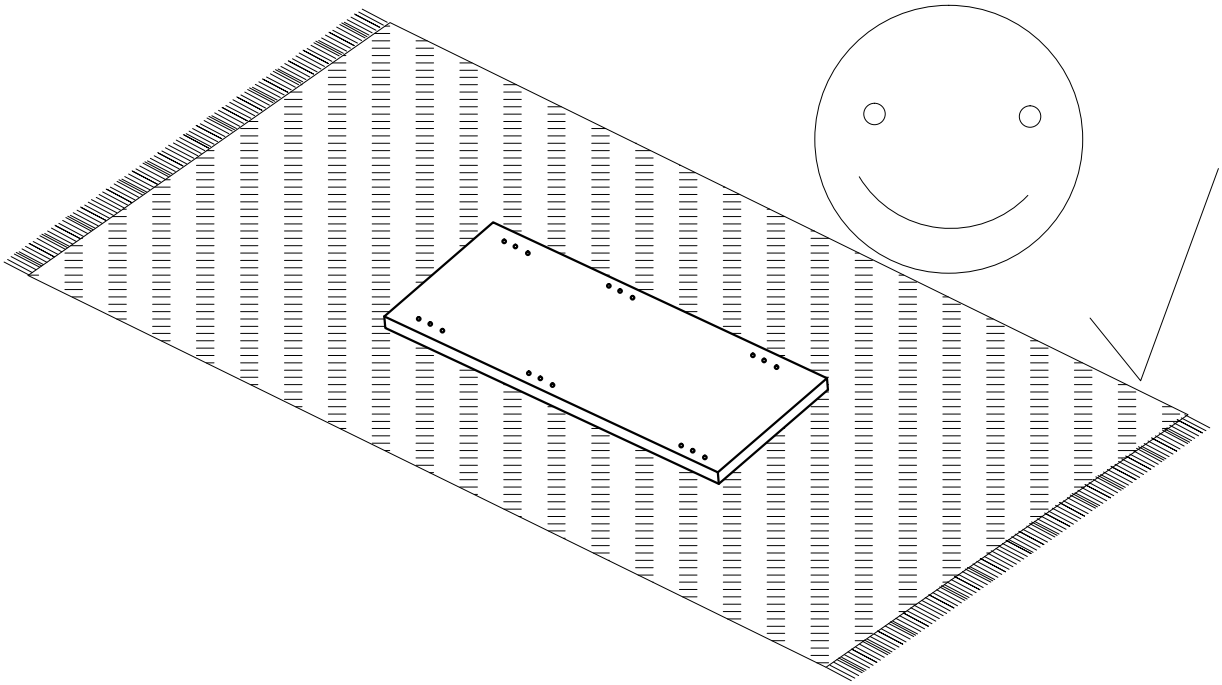

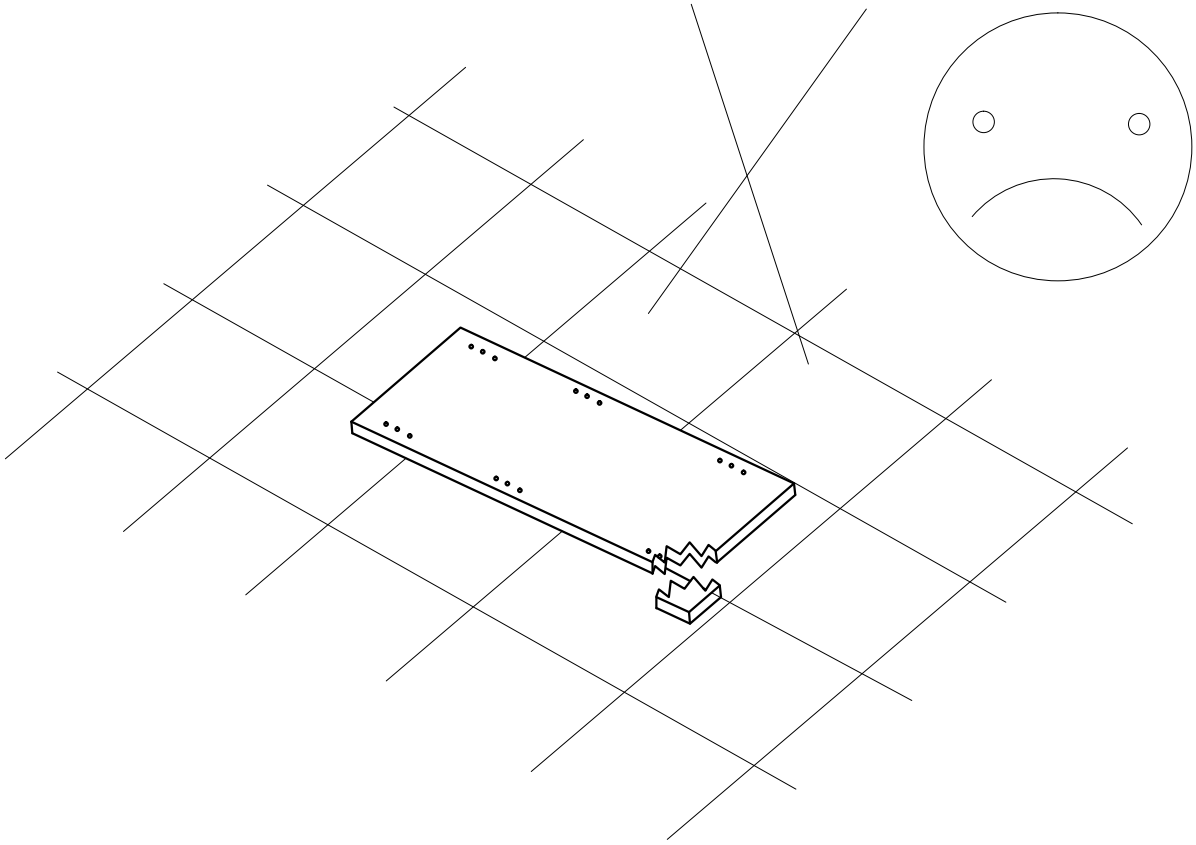

DULAP D3 RAUL 3/18

| | | |
|---|---|---|
| E–50 | S–16<br>ø3x16 | S1–16<br>ø3.5x16 |
| D–003 | AR | T–01 |
| P–02 | PA | HEX |
| SBH | BHOV | PI–01 |
| S–001 | M–07 | H |
| SL–55G | SL–55R | S1–30<br>ø3.5x30 |

# Caracteristici tehnice produs

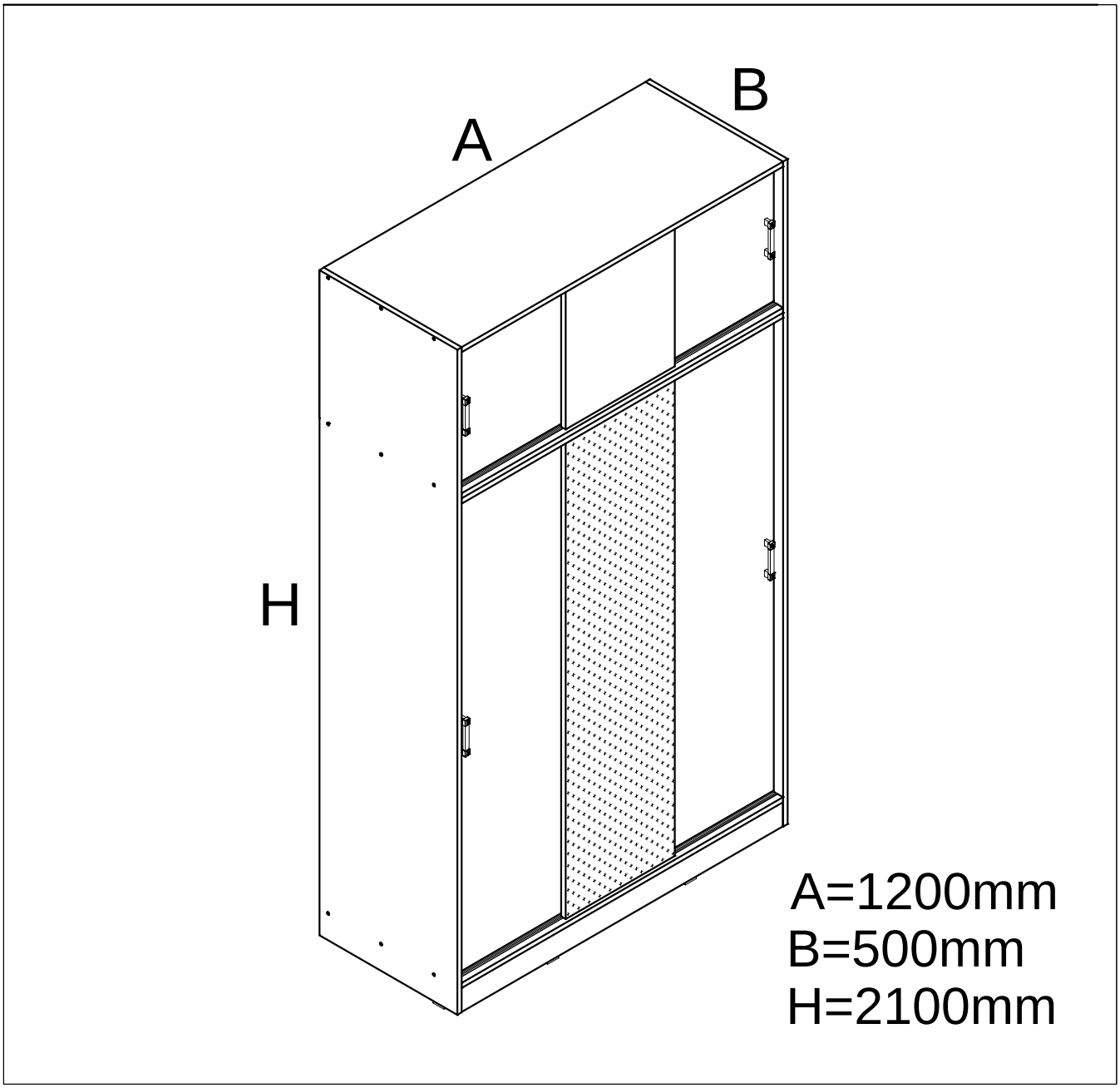


Materiale: - Carcase si fronturi din placi din aschii de lemn (PAL) meleminate de grosime = 16 mm

- Spate corpuri din placi din fibre de lemn de inalta densitate (HDF) de grosime = 3 mm
- Oglinda
- Manere din materiale plastice
- Cant ABS 0.5 mm
- Sistem culisare
- Bara suport umerase
- Elemente de imbinare din lemn si metalice
- Picior baza plastic H=6 mm

2090.5X500.5X16

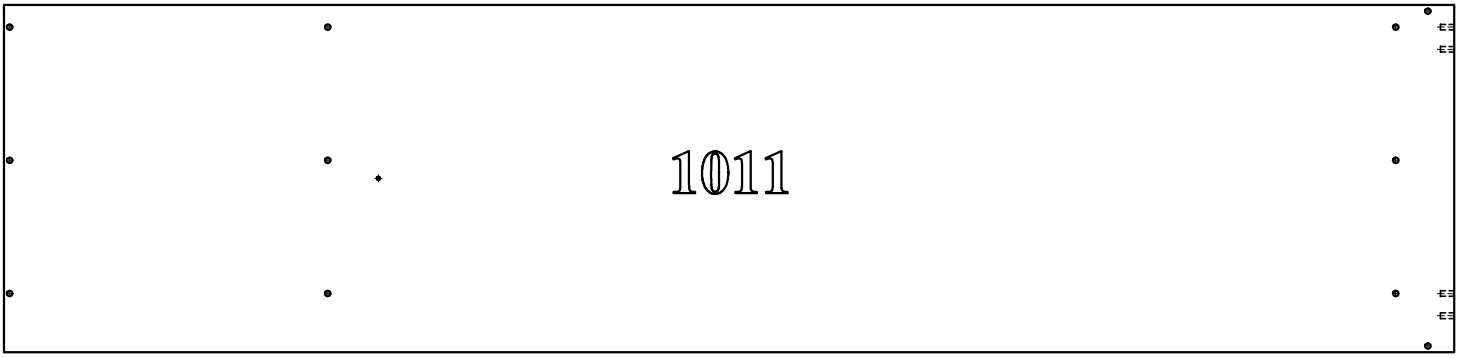


2090.5X500.5X16

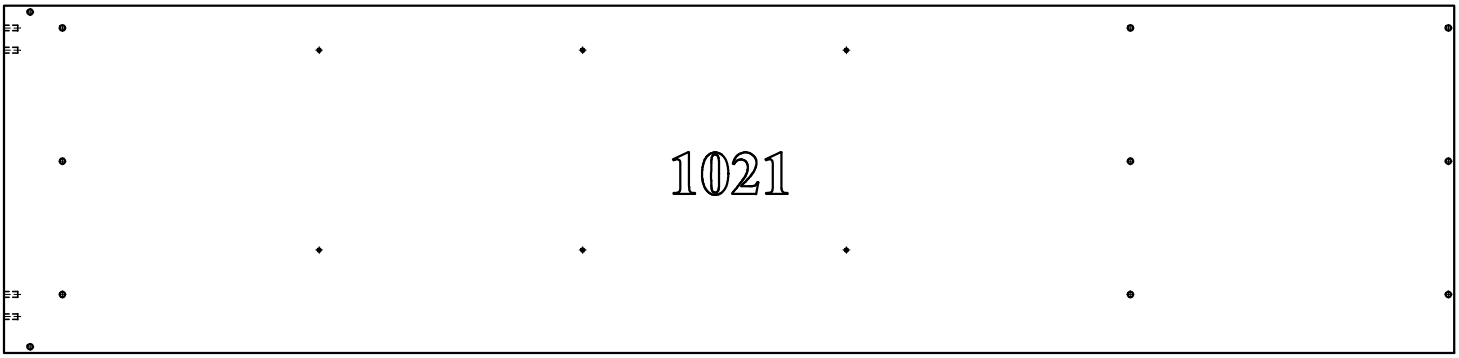


1523X400.5X16

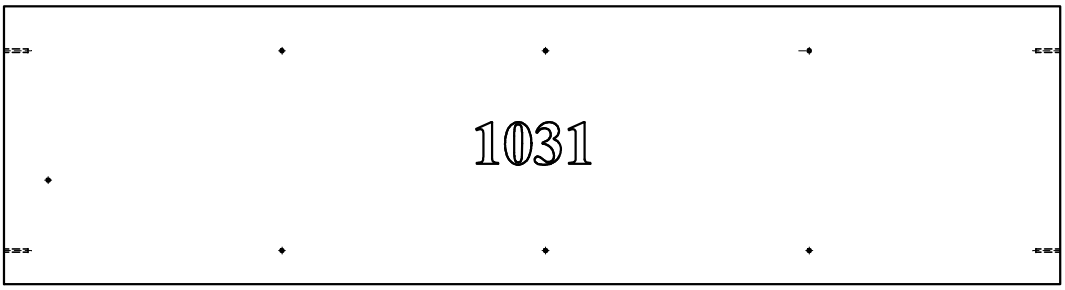


1168X500.5X16

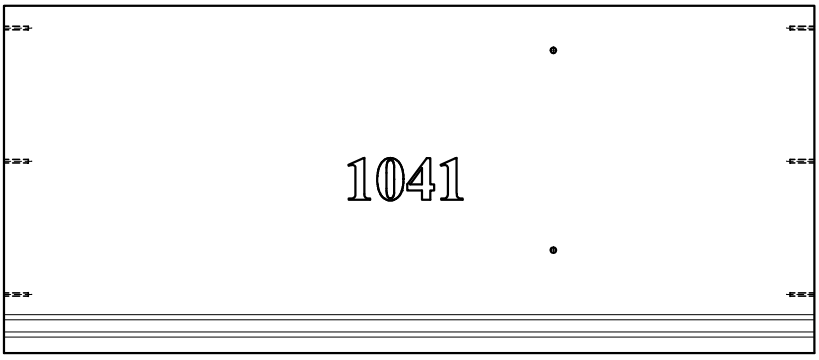


1168X500.5X16

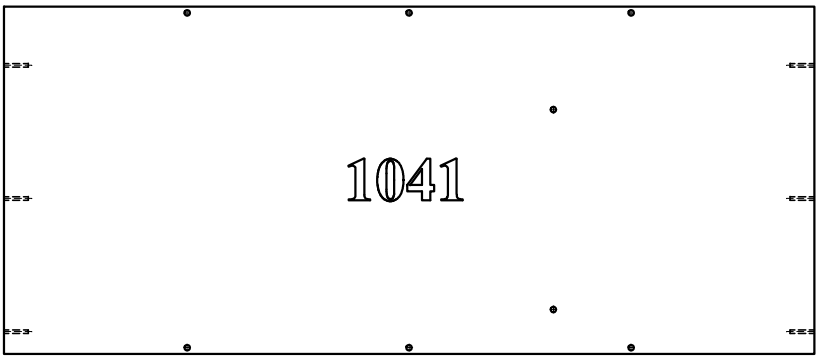


DULAP D3 RAUL 6/18

1168X500.5X16

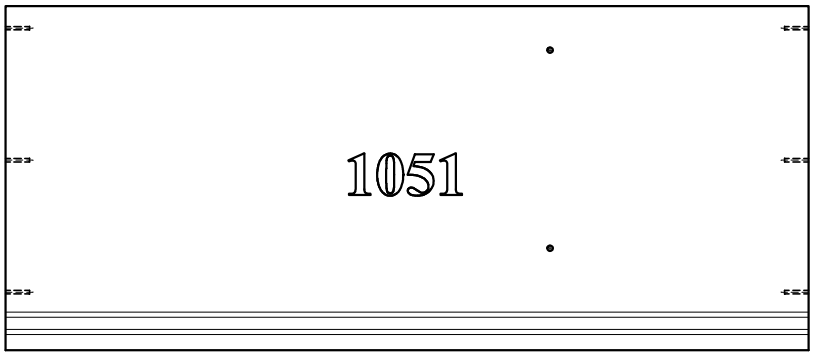


368X380.5X16=3PCS

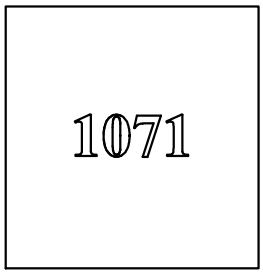


1168X500.5X16

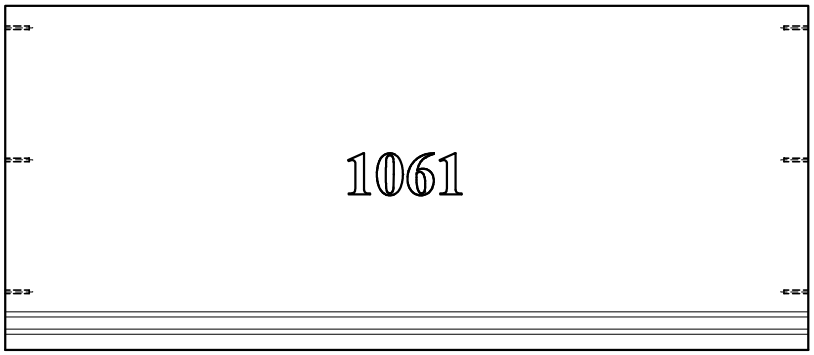


1168X80.5X16

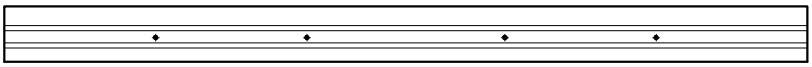

1121

1498X396X16=2PCS

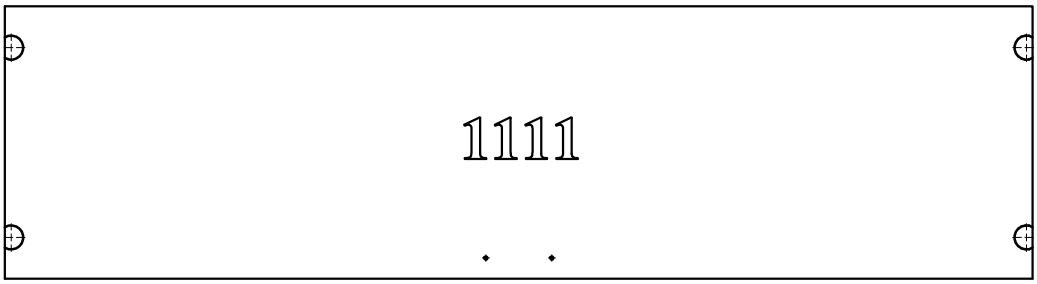


437X396X16=2PCS

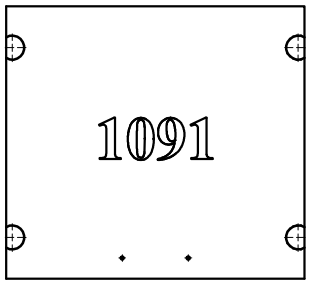


1498X396X16

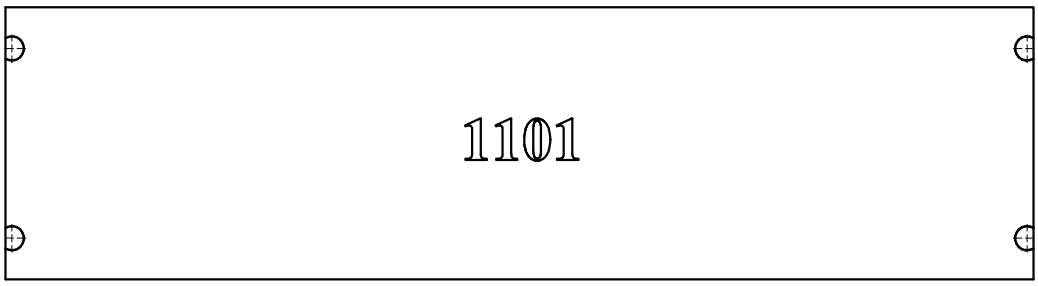


437X396X16

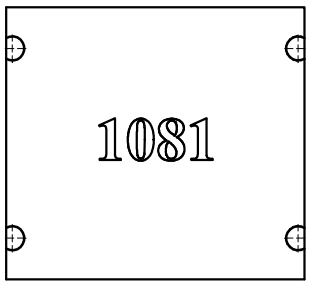


1168X76X16=2PCS

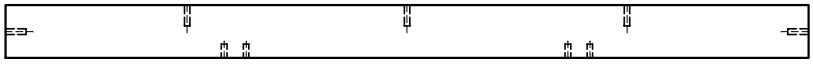

1131

1196X465X3

1540X400X3=2buc

1540X390X3

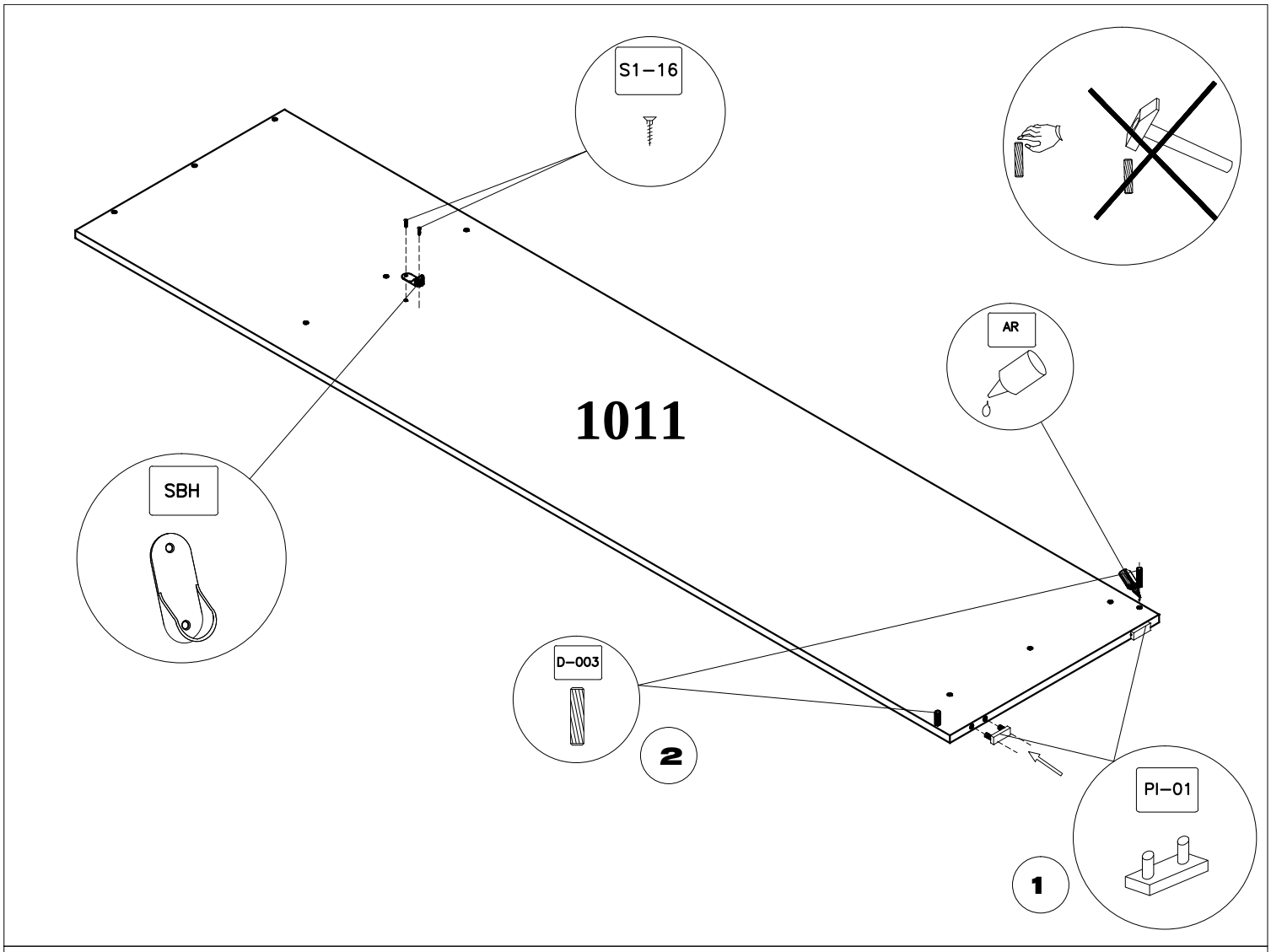


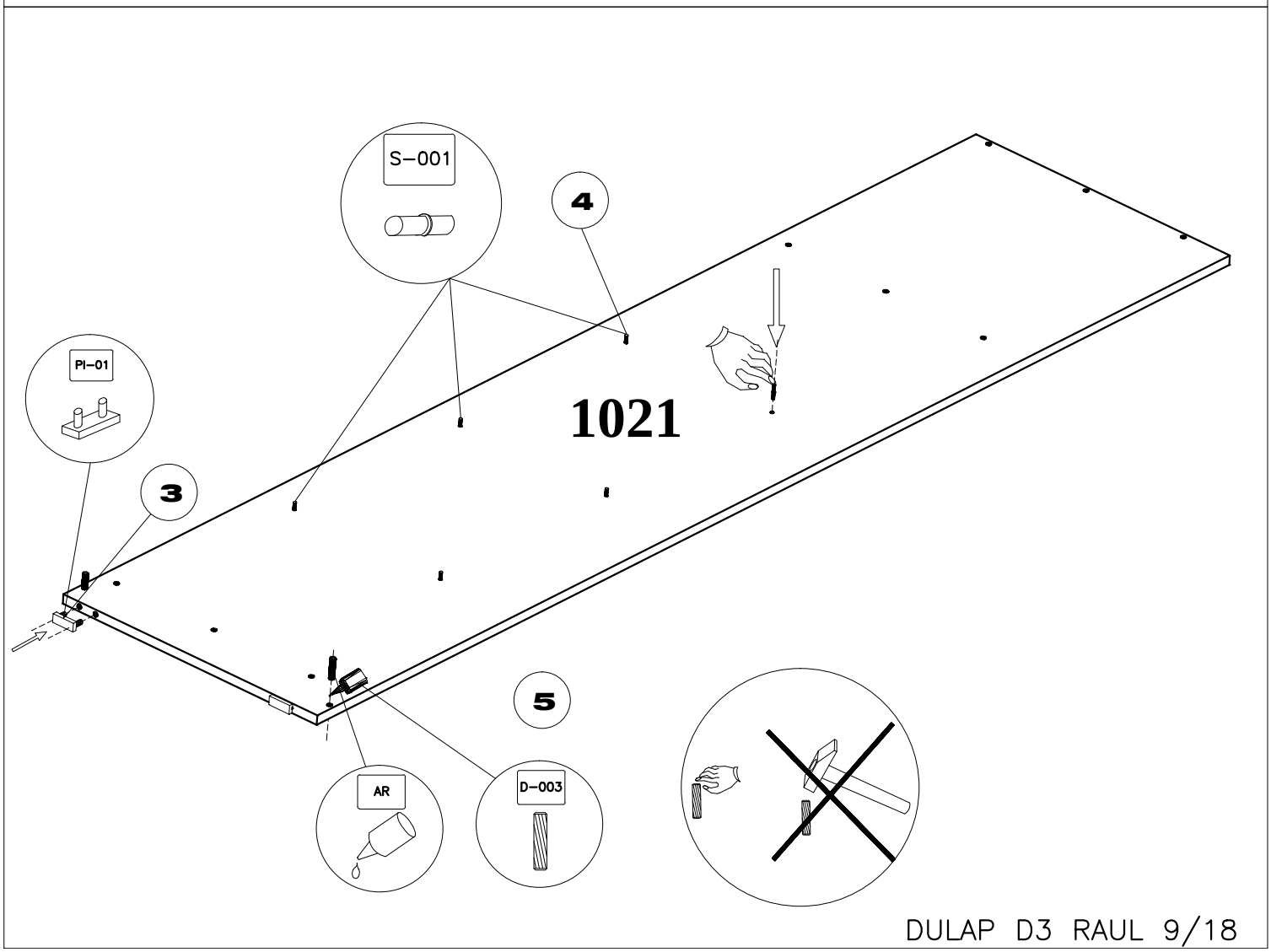


DULAP D3 RAUL 9/18

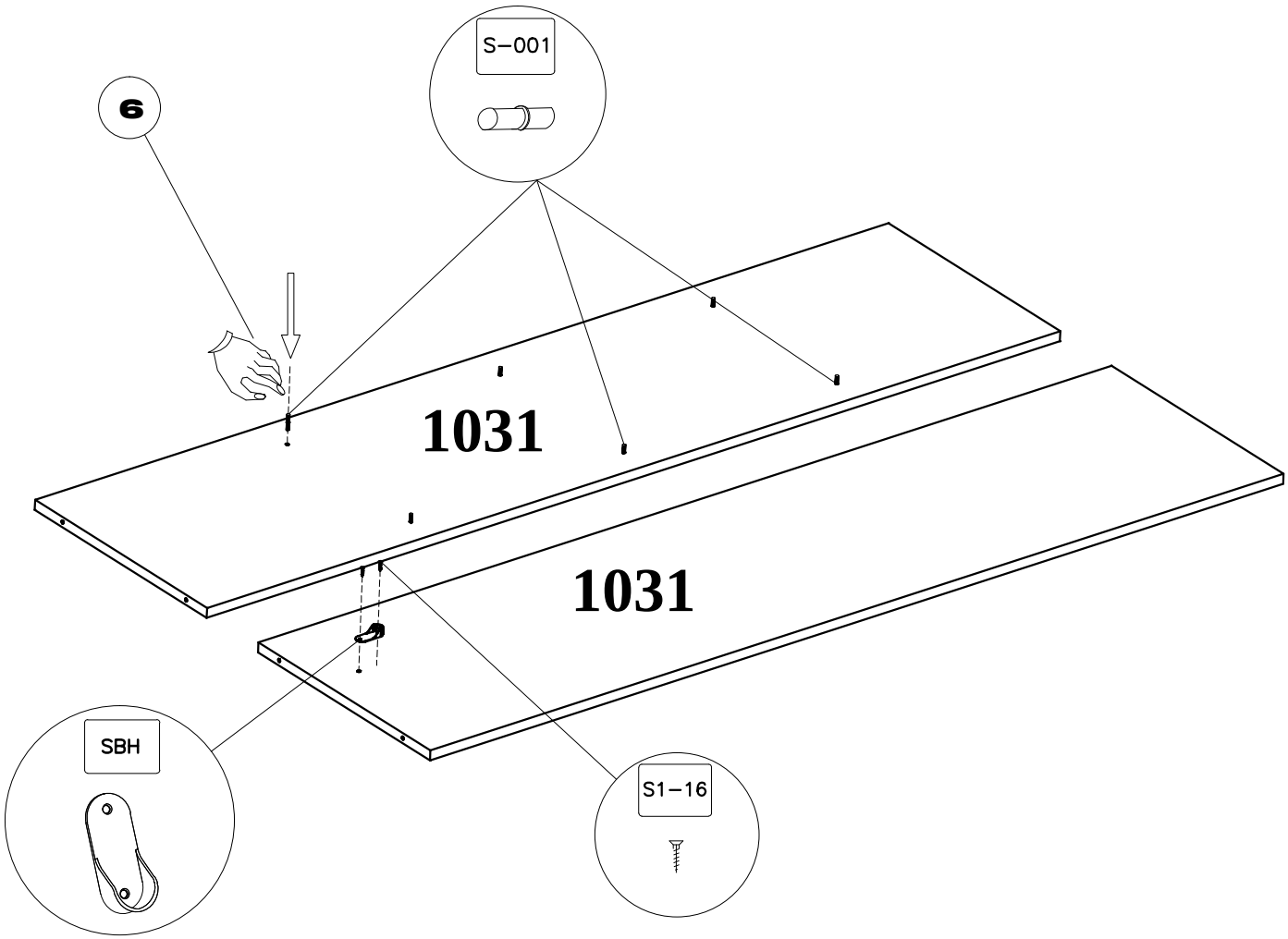
S-001
6
1031
1031
SBH
S1-16

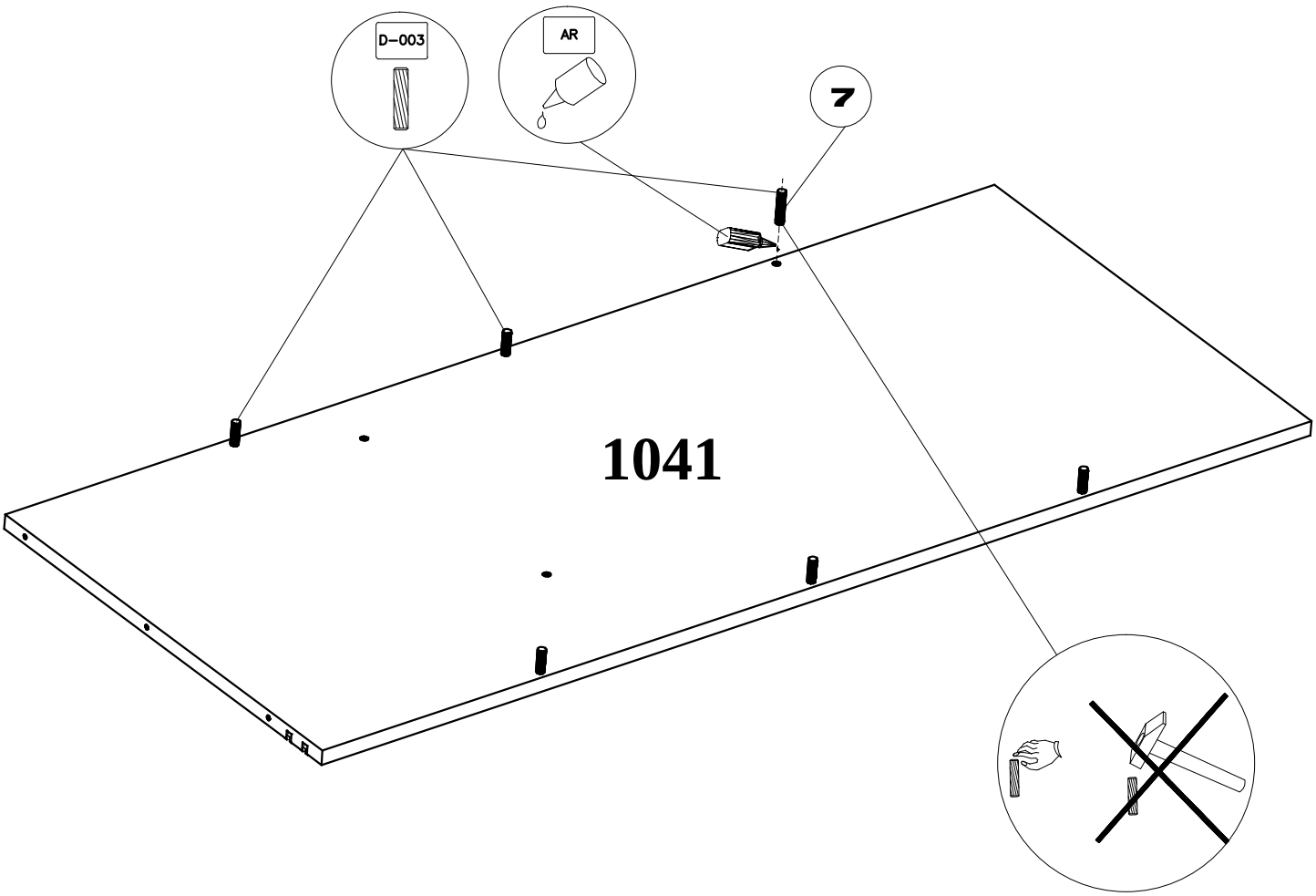
D-003
AR
7
1041

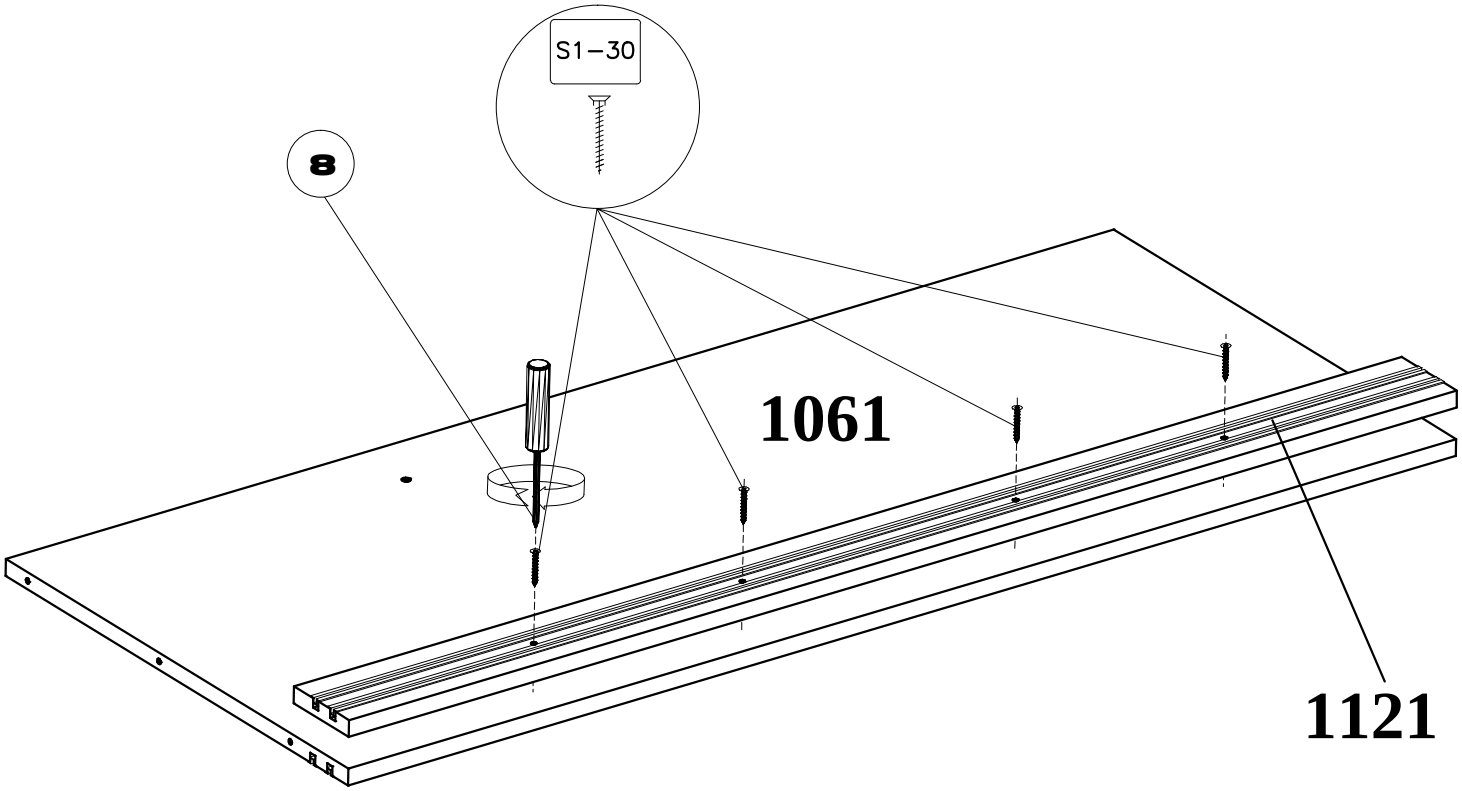
S1–30
8
1061
1121

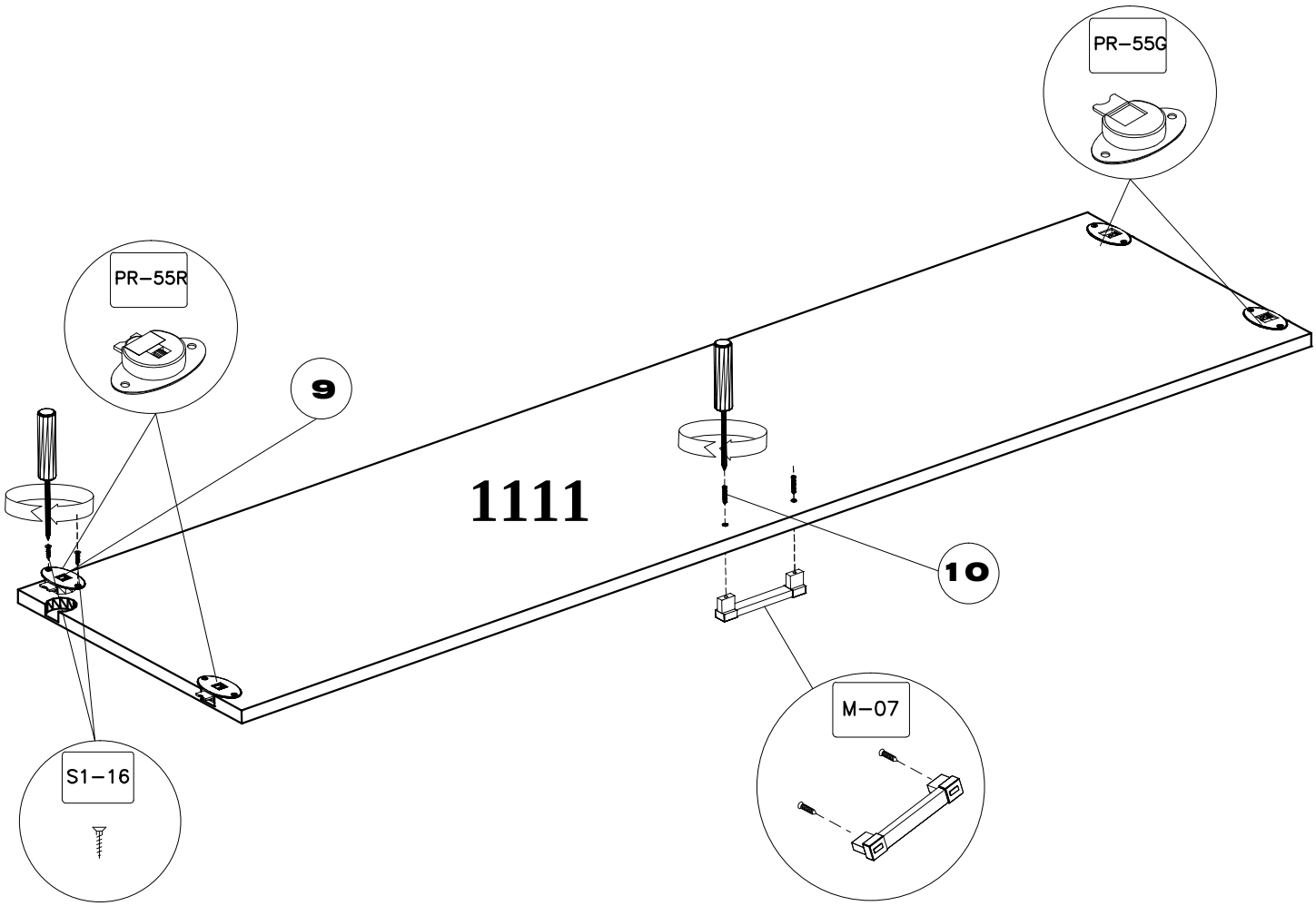
PR–55G
PR–55R
9
1111
10
M–07
S1–16

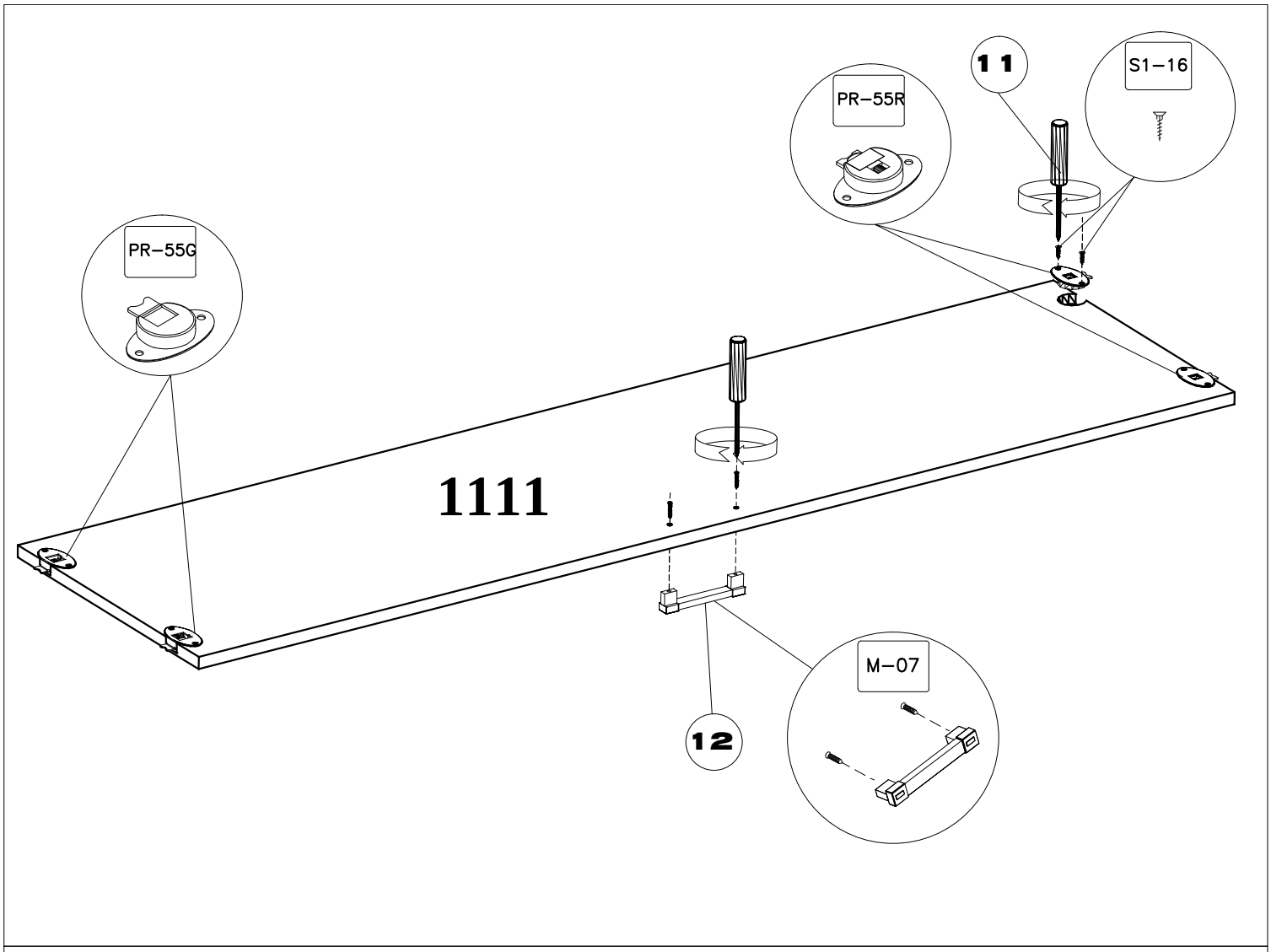
PR-55R
11
S1-16
PR-55G
1111
M-07
12

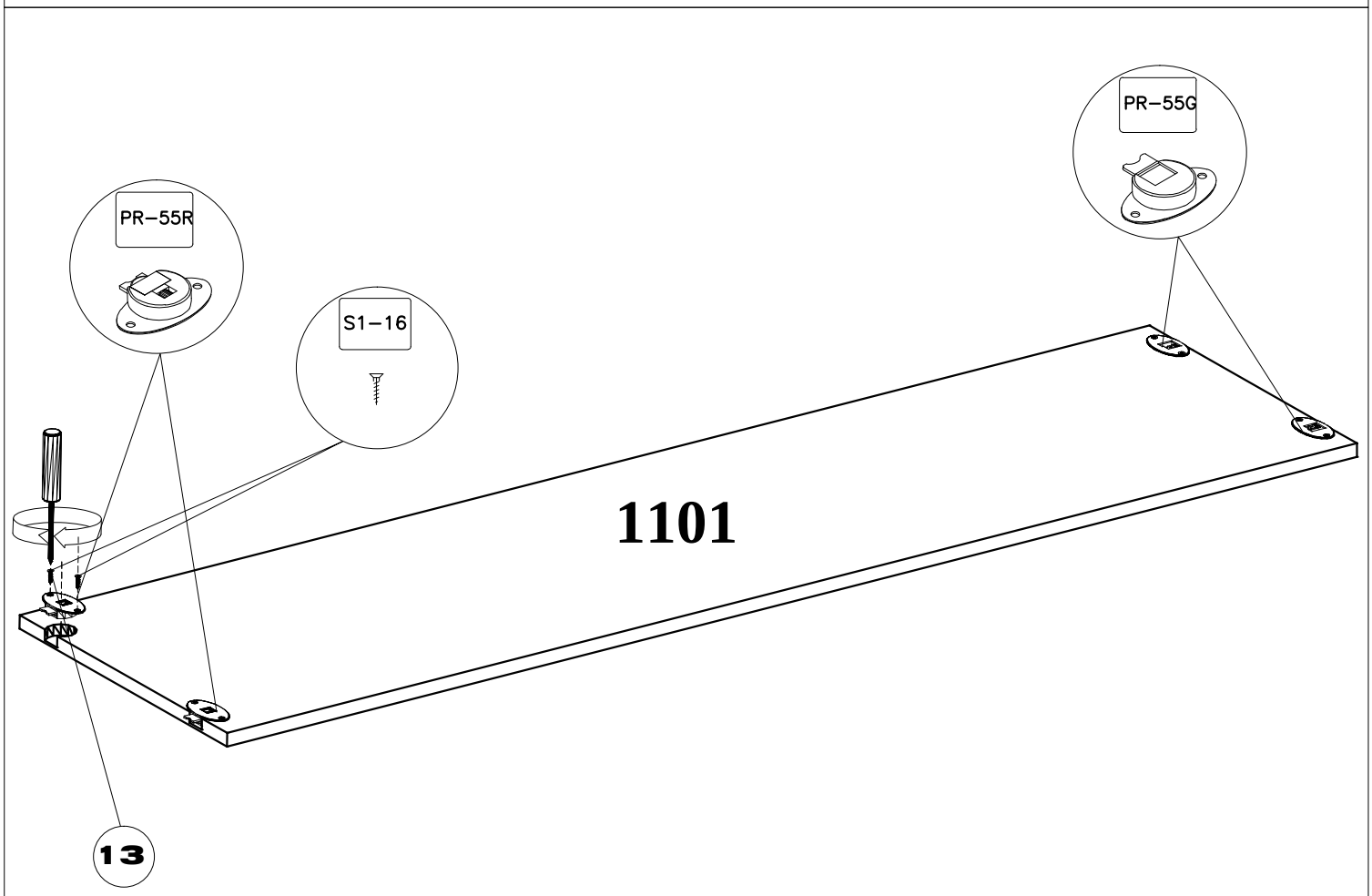
PR-55G
PR-55R
S1-16
1101
13

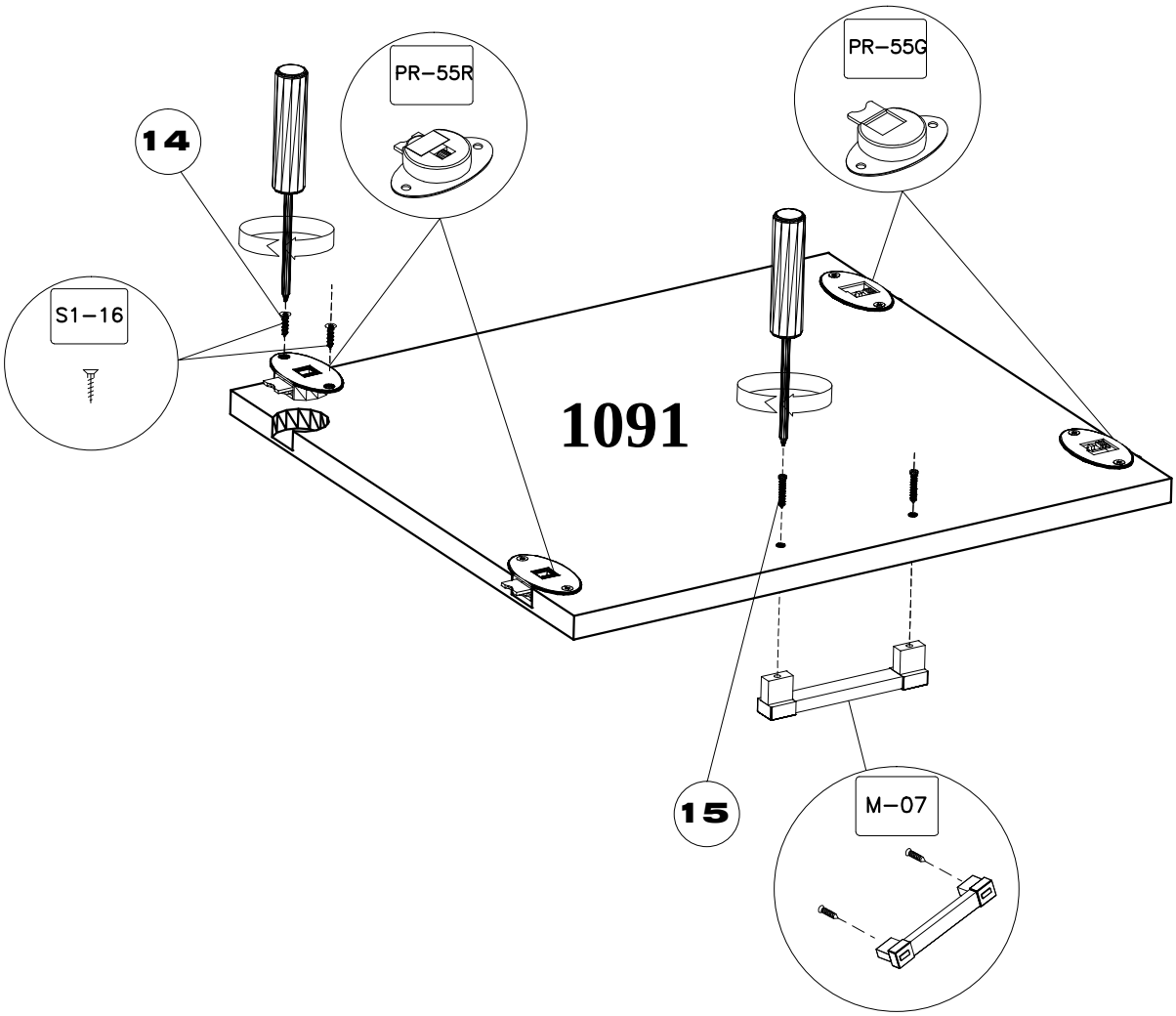
14
PR-55R
PR-55G
S1-16
1091
15
M-07

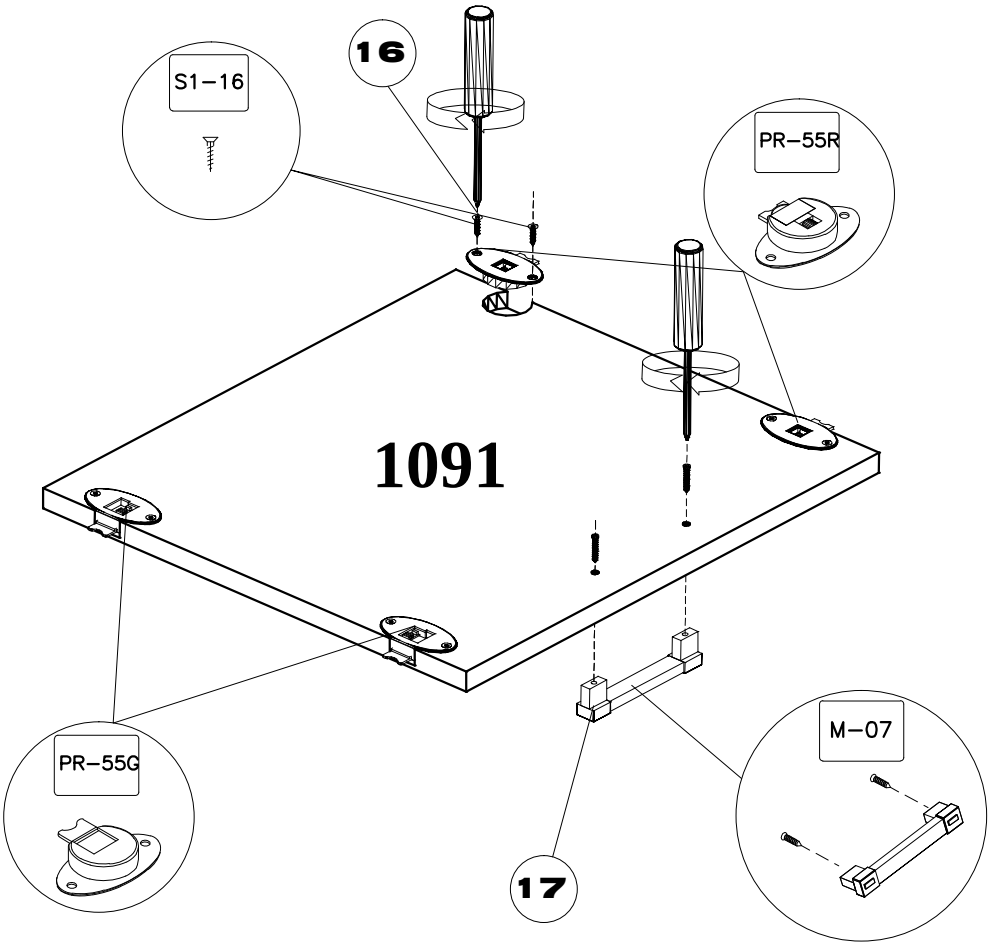
16
S1-16
PR-55R
1091
PR-55G
M-07
17

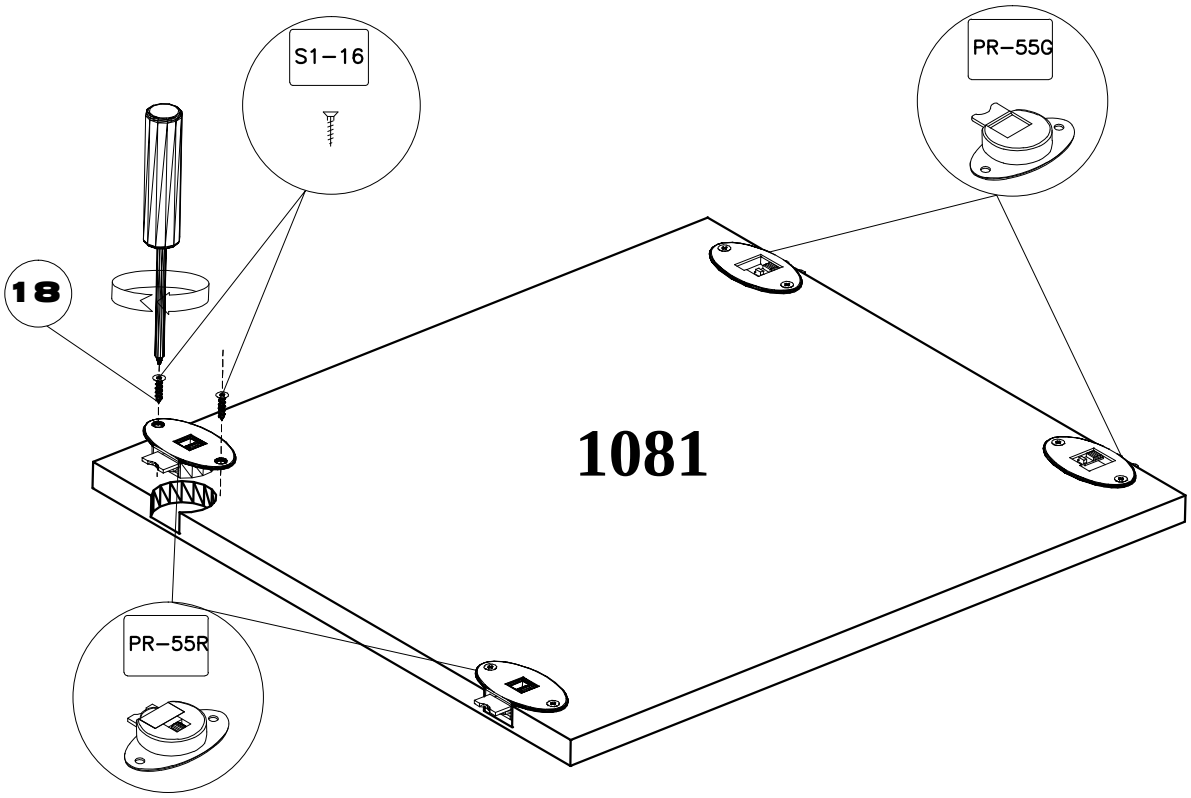
S1-16
PR-55G
18
1081
PR-55R

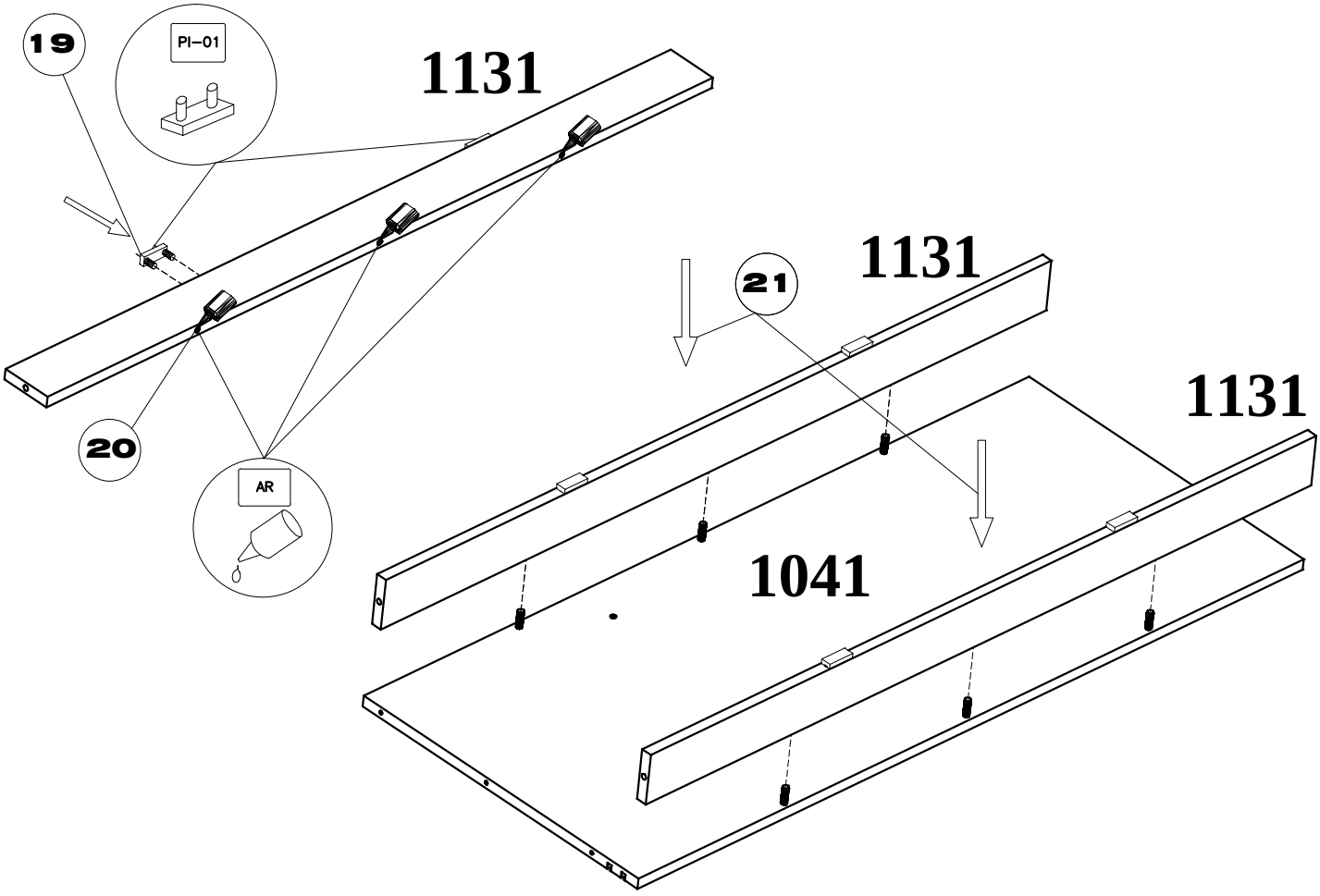
19
PI-01
1131
21
1131
1131
20
AR
1041

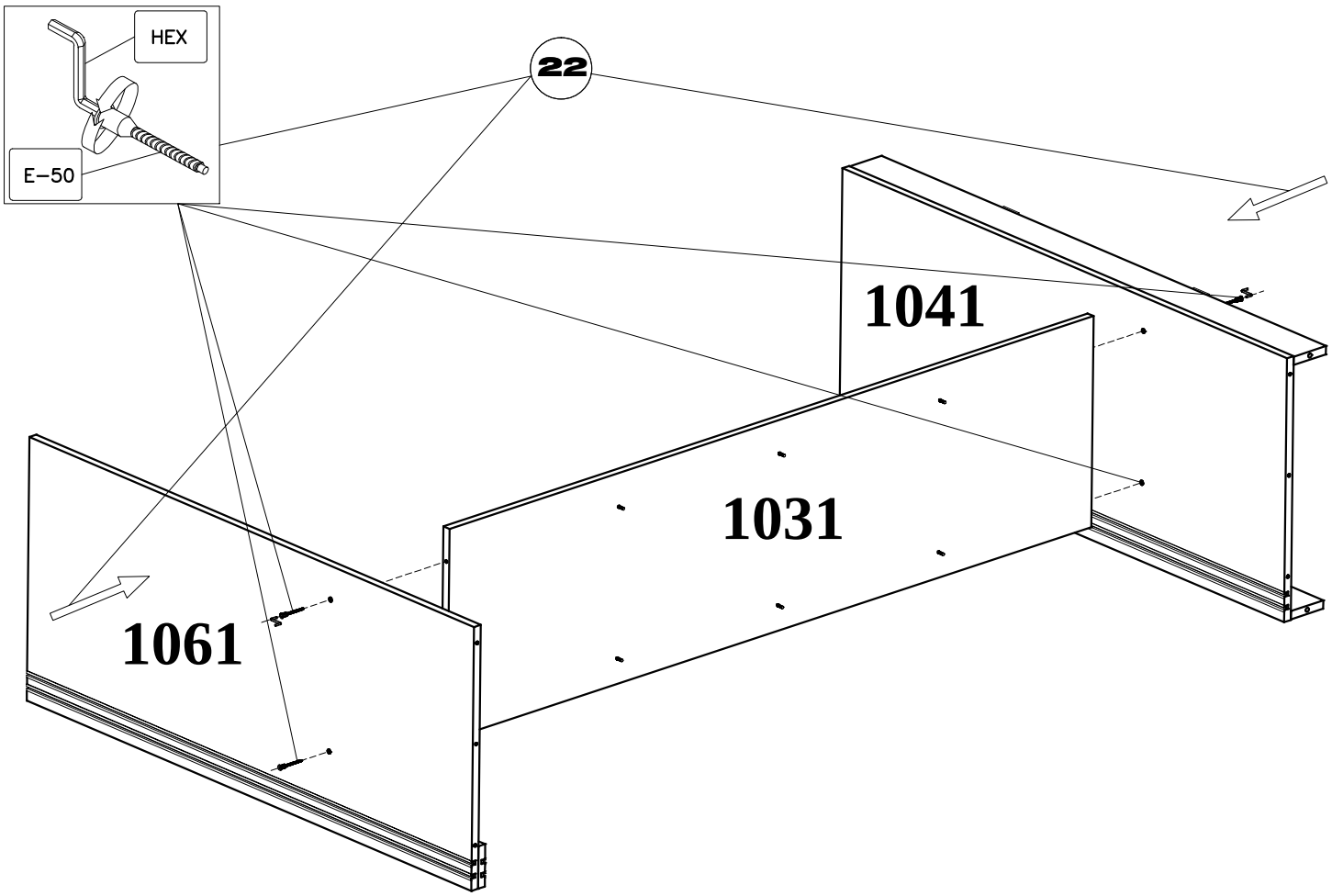


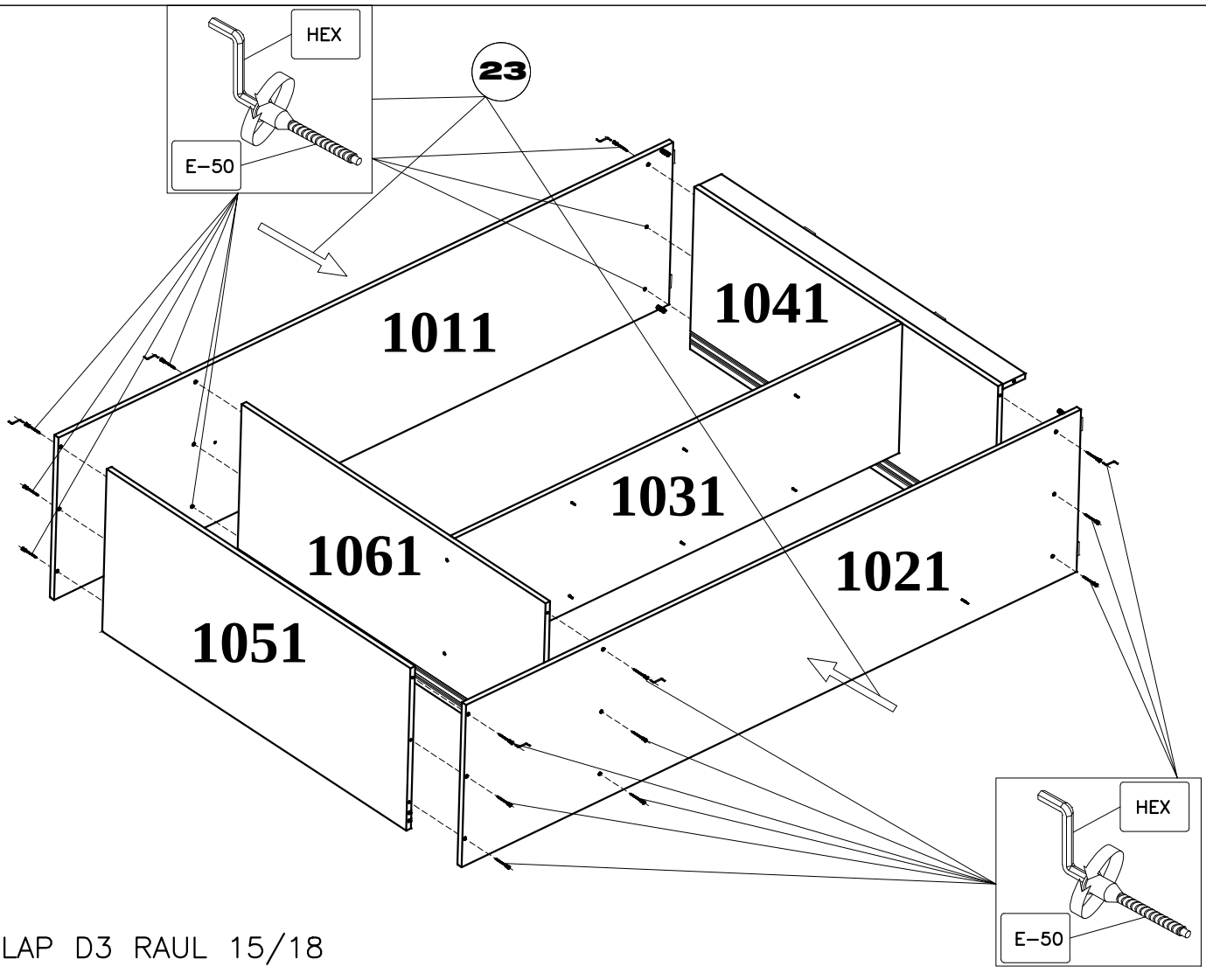


DULAP D3 RAUL 15/18

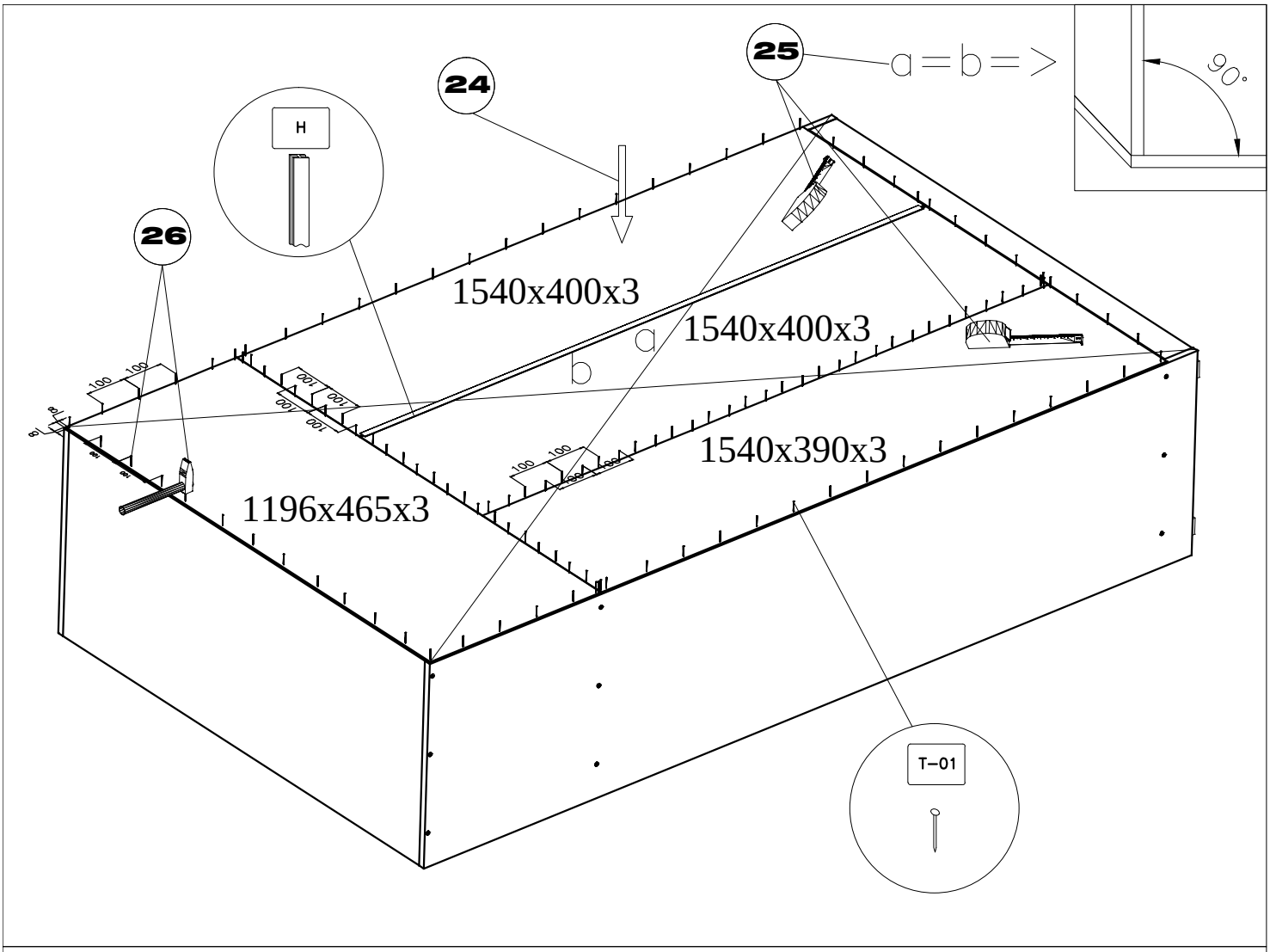
24
25
a=b=>
90°
H
26
1540x400x3
1540x400x3
b
a
1540x390x3
1196x465x3
T-01

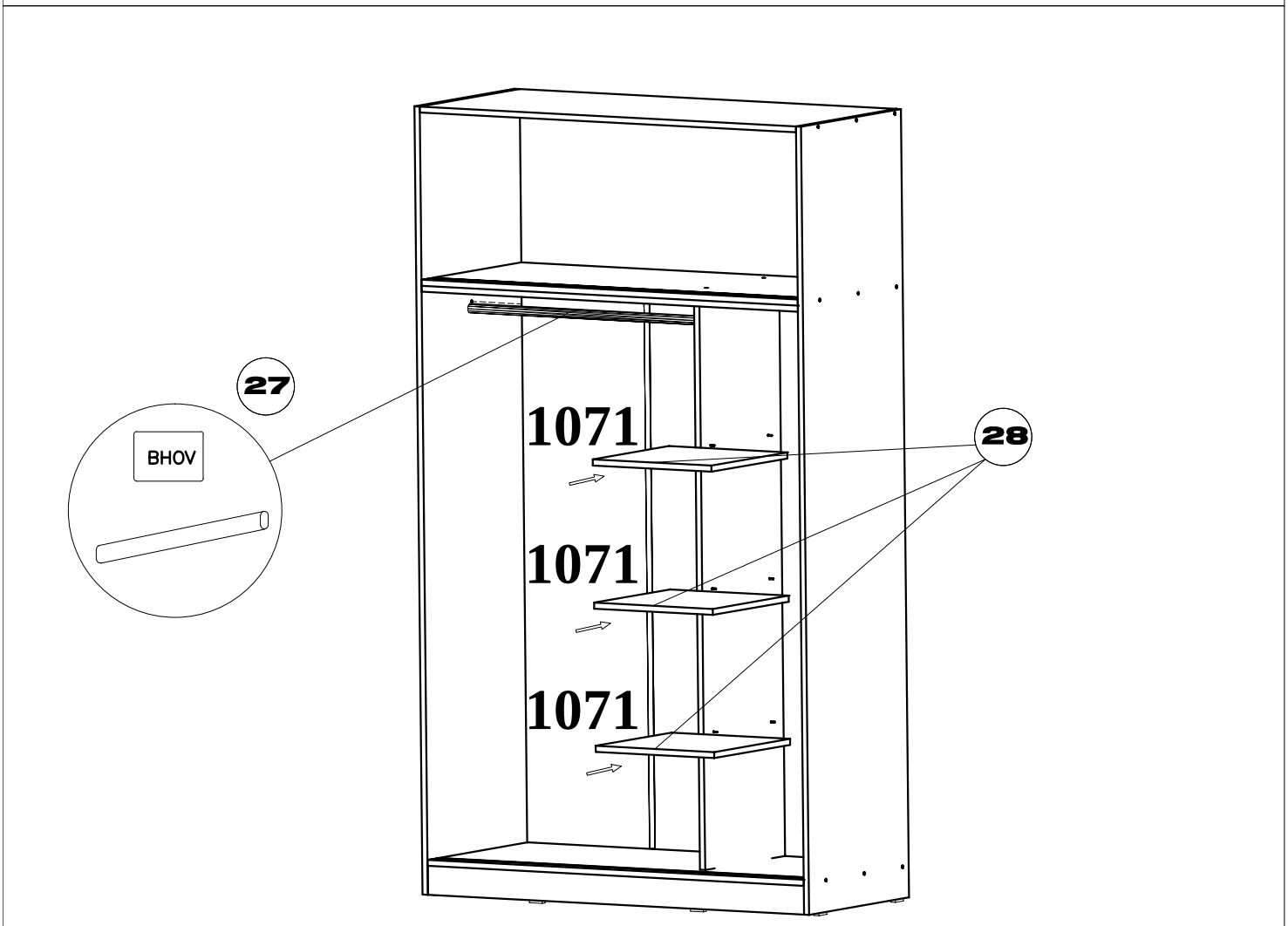
27
BHOV
1071
1071
1071
28

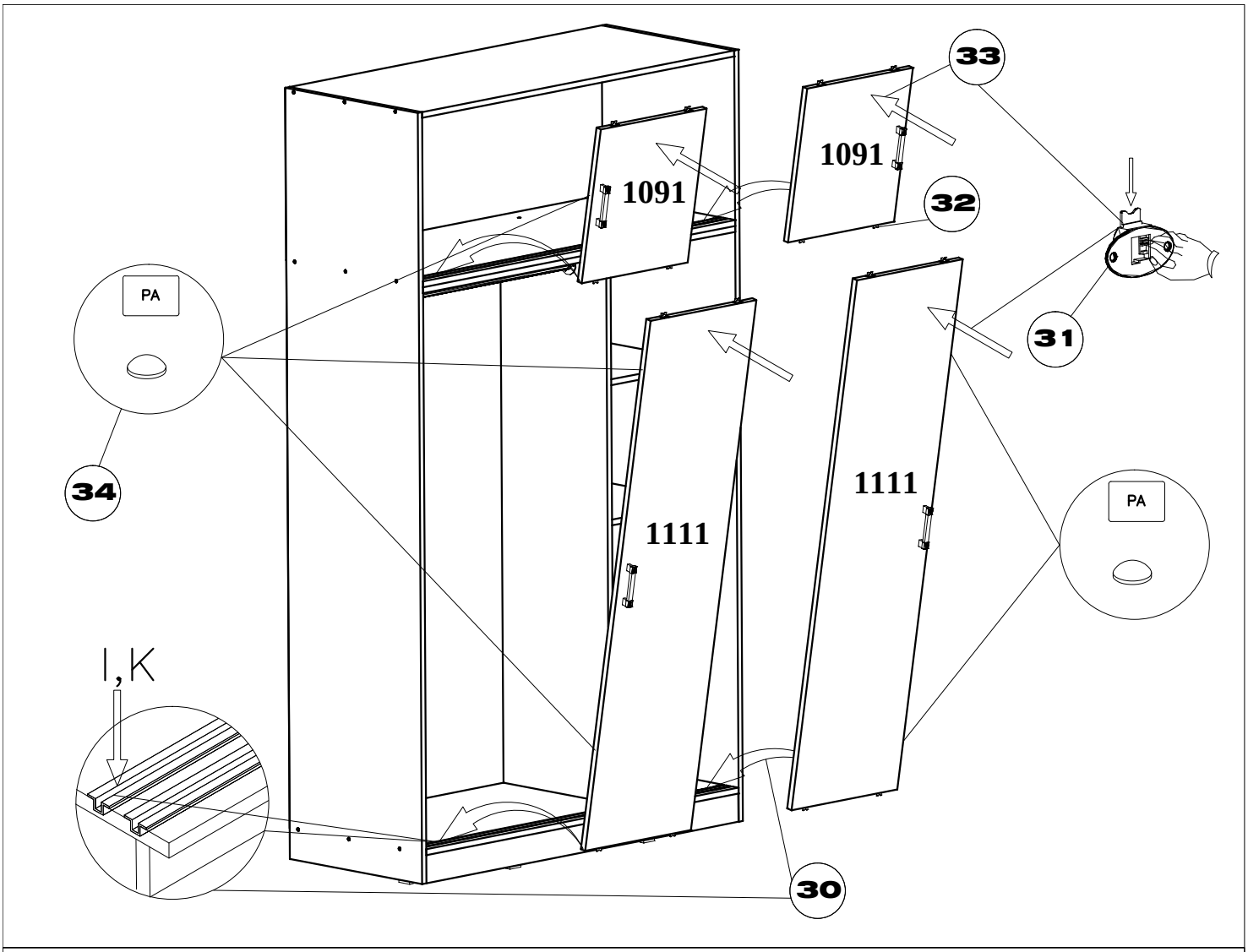


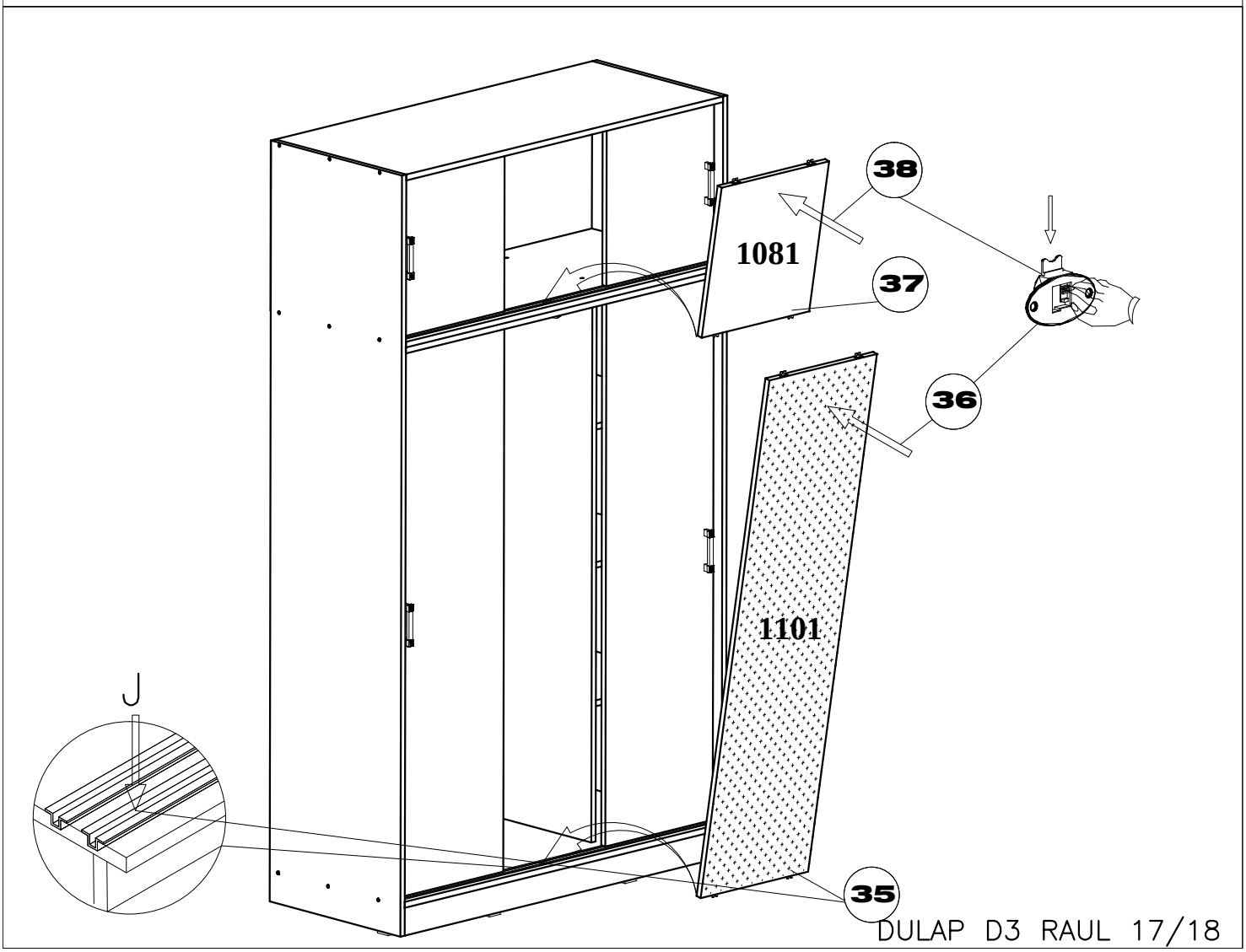


DULAP D3 RAUL 17/18

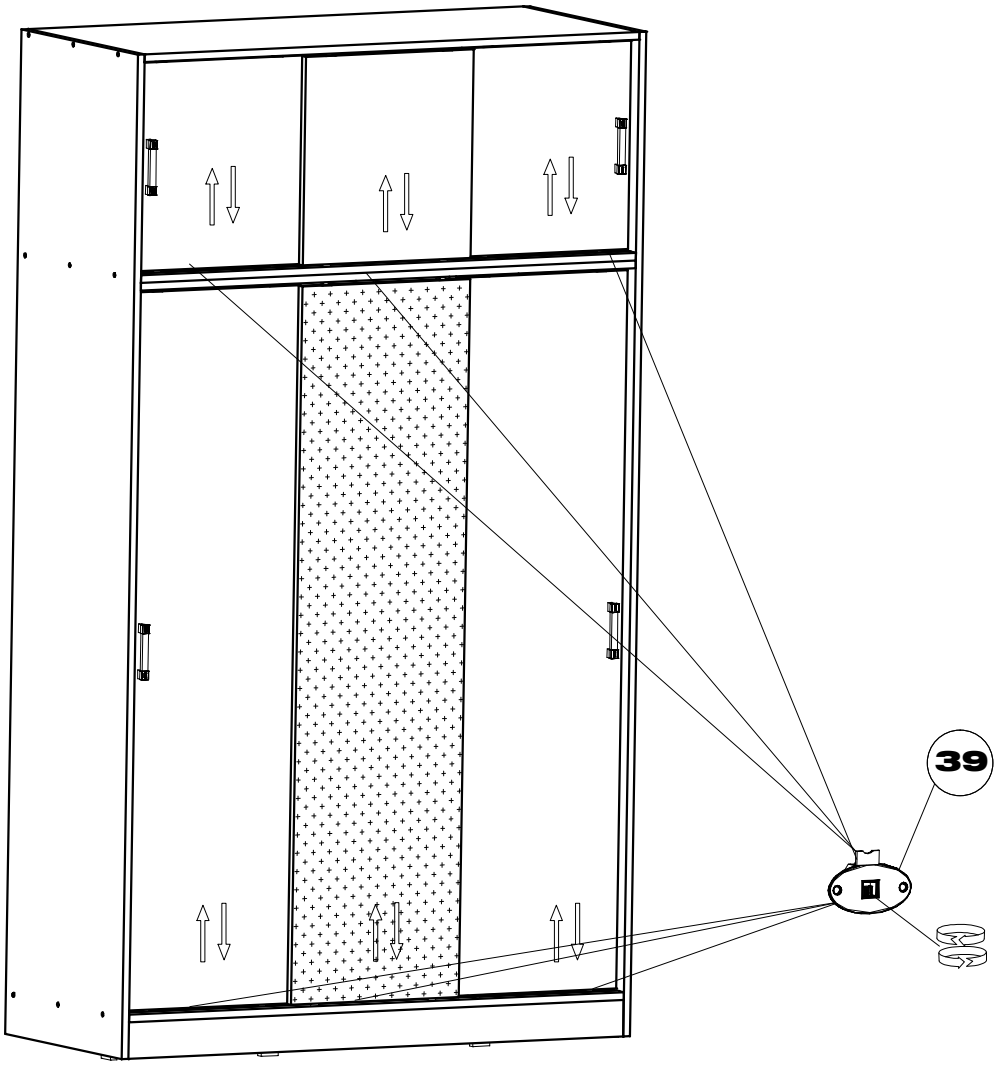


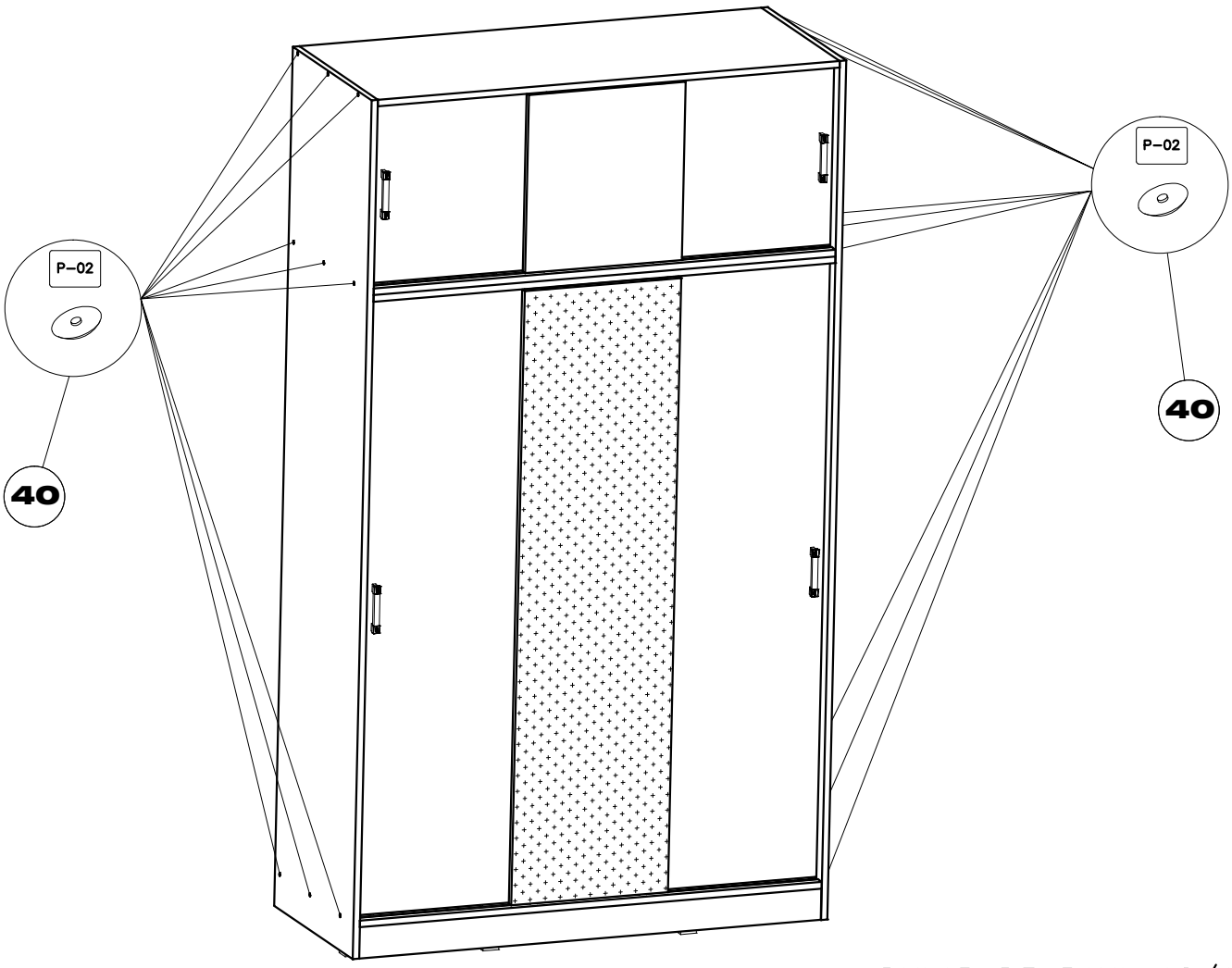


DULAP D3 RAUL 18/18