Assembly instructions
Instructiuni de montare

PRODUCT : Living NORDIC
PRODUS : Biblioteca NORDIC

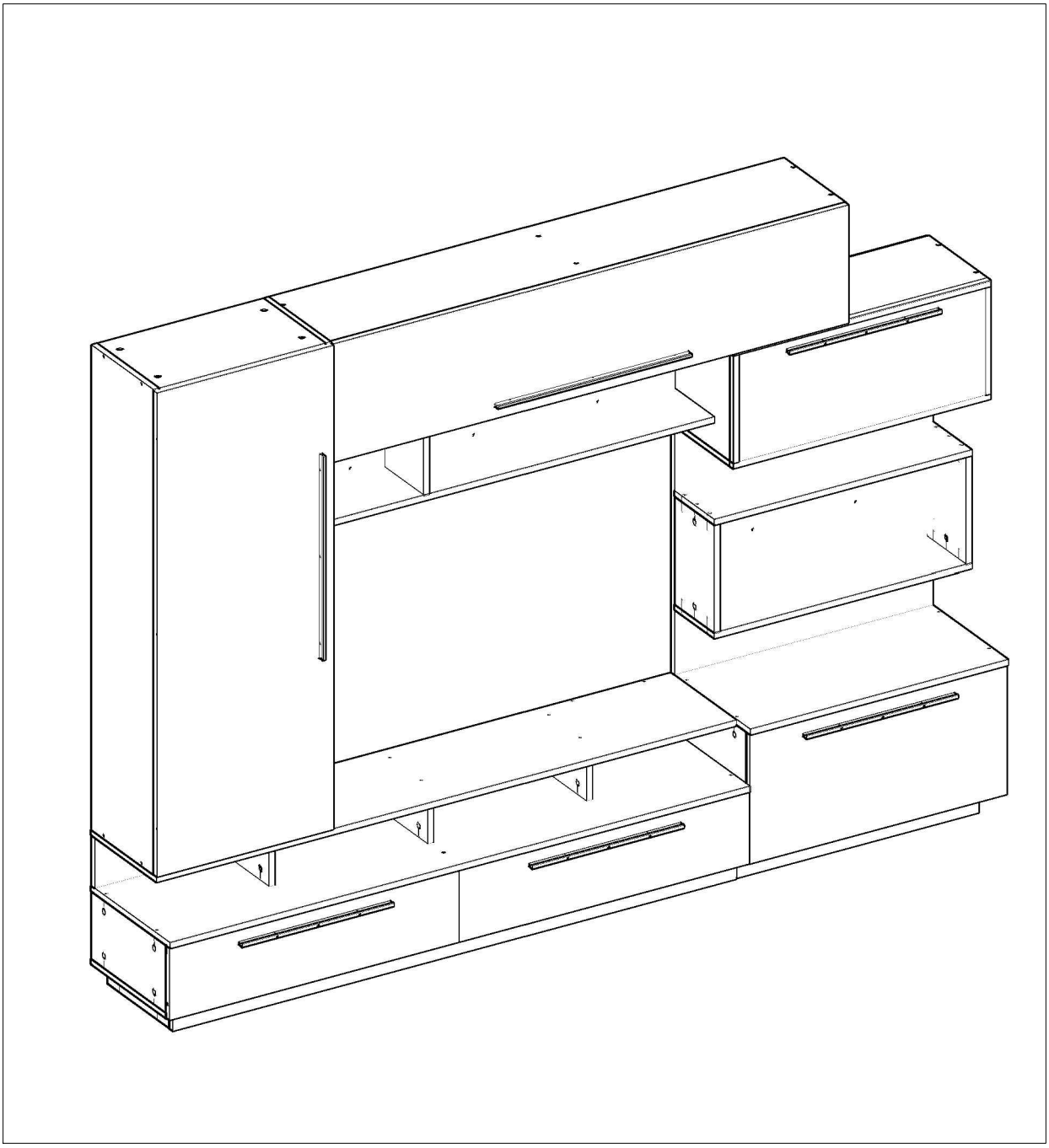

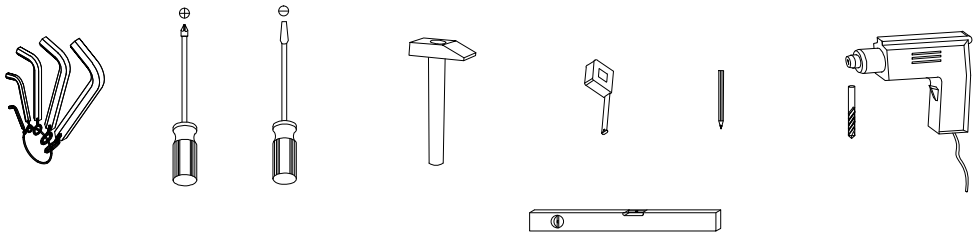

ENG Dear customer,

- As a furniture producer we would like to inform you that a wall fixing furniture can be good only if the connection between fixing material (plugs) and the wall is better. For the suspended items check the wall and use only apropriate type of dowels (brick, BCA, plasterboard,etc.) purchased from a specialty store.
-Assembler is ultimately responsible for a fixed wall.Installation and laying of electrical items will be made only by qualified personnel and
authorized.
- Follow the description and specification of Charge assembly instructions - in case overload that may occur due to children playing, because people, material or due to other factors - we assume no liability as a manufacturer of furniture.
-O perfect functionality of the furniture is assured only if the settlement
this adjusts the horizontal and vertical. Only after that will adjust the doors.
- All screws and removable connection elements will be checked and tightened
after 5 to 6 weeks to ensure safety o final fixation.
– Do not use abrasive cleansers
– If not follow the instructions on the use, maintenance or installation, if the products or changes, if changes or used parts that do not meet original pieces, then lose any warranty or claim
responsibility of the manufacturer of furniture.

Incarcari maxime pentru polite in Kg: Maximum weight in Kg Shelf							
Lungime Length	Grosime PAL melaminat Thick chipboard mm	16	18	22	25	28	Sticla Glass 5 / 6/ 8
0 < 400		8 kg	8 kg	8 kg	10 kg	10 kg	Lungime Length >600=5Kg.
401 < 600		6 kg	6 kg	6 kg	6 kg	6 kg	
601 < 800		5 kg	5 kg	5 kg	5 kg	5 kg	Lungime Length >1000=2Kg.
801 < 1000		3 kg	3 kg	3 kg	3 kg	3 kg	

RO Stimate client,

In calitate de producator de mobila am dori sa va informam ca o fixare a mobilei de perete poate fi buna doar daca legatura dintre materialul de fixare (dibluri) si perete este buna. In cazul corpurilor suspendate verificati peretele si folositi doar dibluri corspunzatoare tipului de perete (caramida, BCA, rigips,etc.) achizitionate dintr–un magazin de specialitate. In definitiv montatorul este raspunzator de fixarea de perete.
– Montarea si pozarea articolelor electrice se va efectua doar de catre personal calificat si autorizat.
– Respectati descrierea si specificatiile de incarcare din instructiunile de montaj – in caz de supraincarcare ce poate sa apara datorita copiilor care se joaca, datorita persoanelor, materialului sau datorita altor factori – nu ne asumam nici o raspundere ca producator de mobila.
– O functionalitate perfecta a mobilei este asigurata doar in cazul in care la asezare, aceasta se regleaza pe orizontala si verticala. Doar dupa aceasta se vor regla usile.
– Toate suruburile si elementele de imbinare demontabila vor trebui verificate si stranse dupa 5 pana la 6 saptamani pentru a se asigura o siguranta definitiva a fixarii.
– Nu folositi agenti de curatire abrazivi
– In cazul in care nu se respecta instructiunile de utilizare, de deservire sau de montaj, daca se efectueaza modificari ale produselor, daca se schimba piese sau se folosesc piese care nu corespund pieselor originale, atunci se pierde orice garantie sau pretentie de responsabilitate din partea producatorului de mobila.

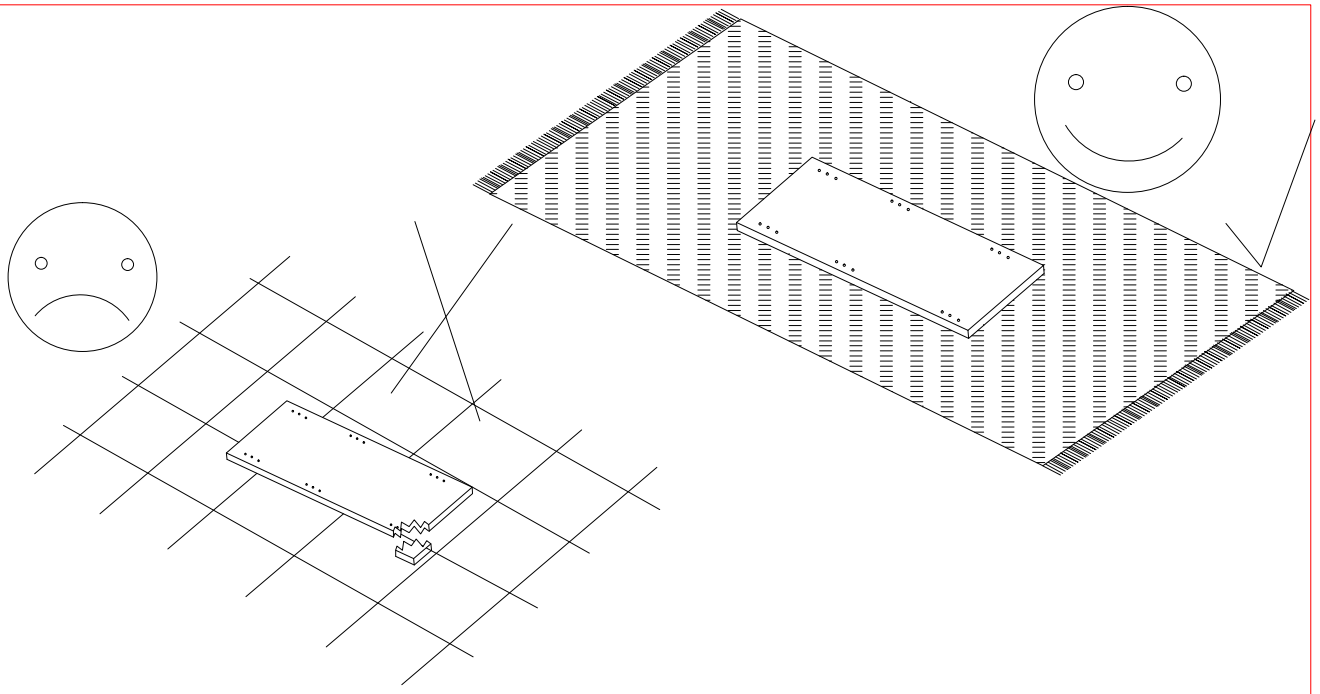

BA-01 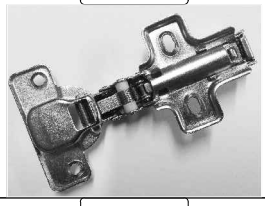	B-01 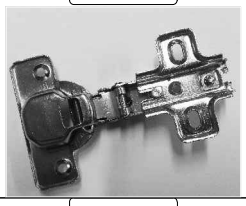	SU 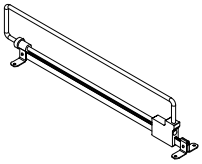	M-02 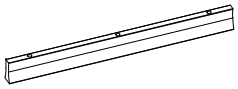
LAF 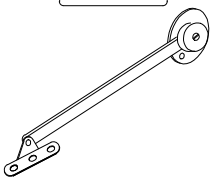	PI-80N 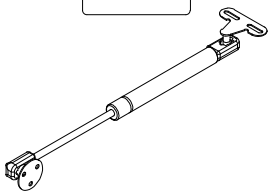	E-50	M-03 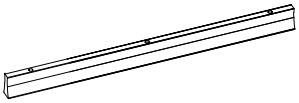
D-002	D-001	S1-16 Ï 3.5x16	SC 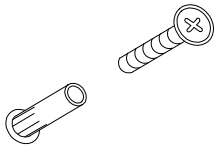
DRW-350H 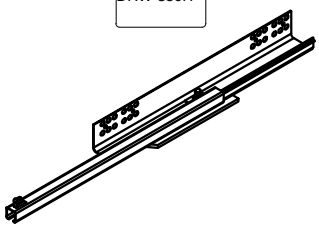	HEX 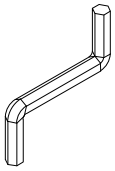	AR	T-01
D-003	PI-01 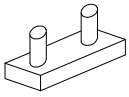		C-01 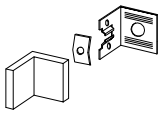

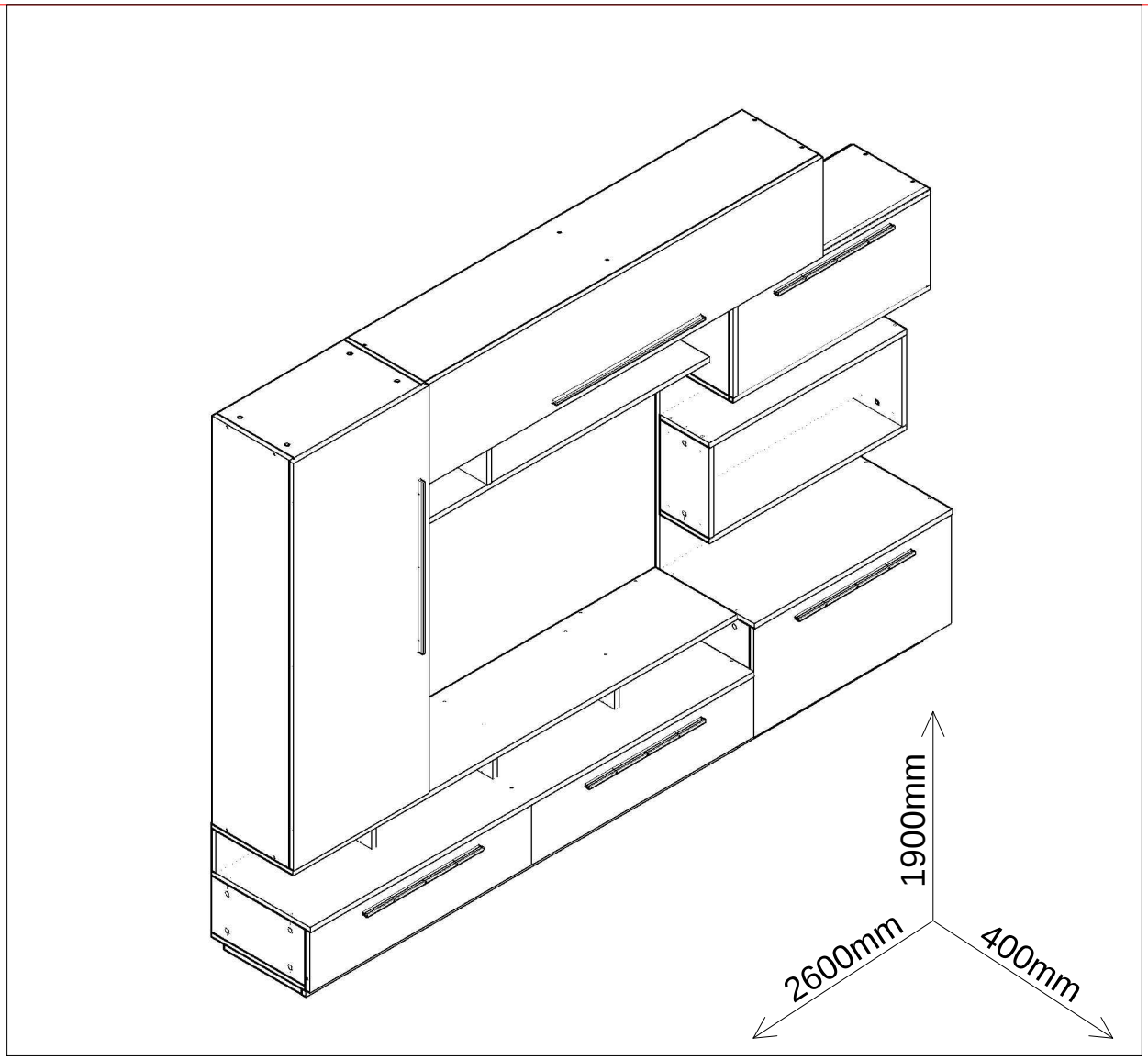

Materiale: - Placi din aschii de lemn (PAL), meleminate de grosime = 16 mm

- Placi din fibre de lemn de inalta densitate (HDF) de grosime = 3 mm
    - Cant ABS 0.5 mm - Carcasa
    - Cant ABS 1 mm - Front
    - Elemente de imbinare din lemn si metalice
    - Manere plastic
    - Glisiere metalice
    - Balamale aruncatoare metalice
    - Pistoane
    - Limitatori cu farnare

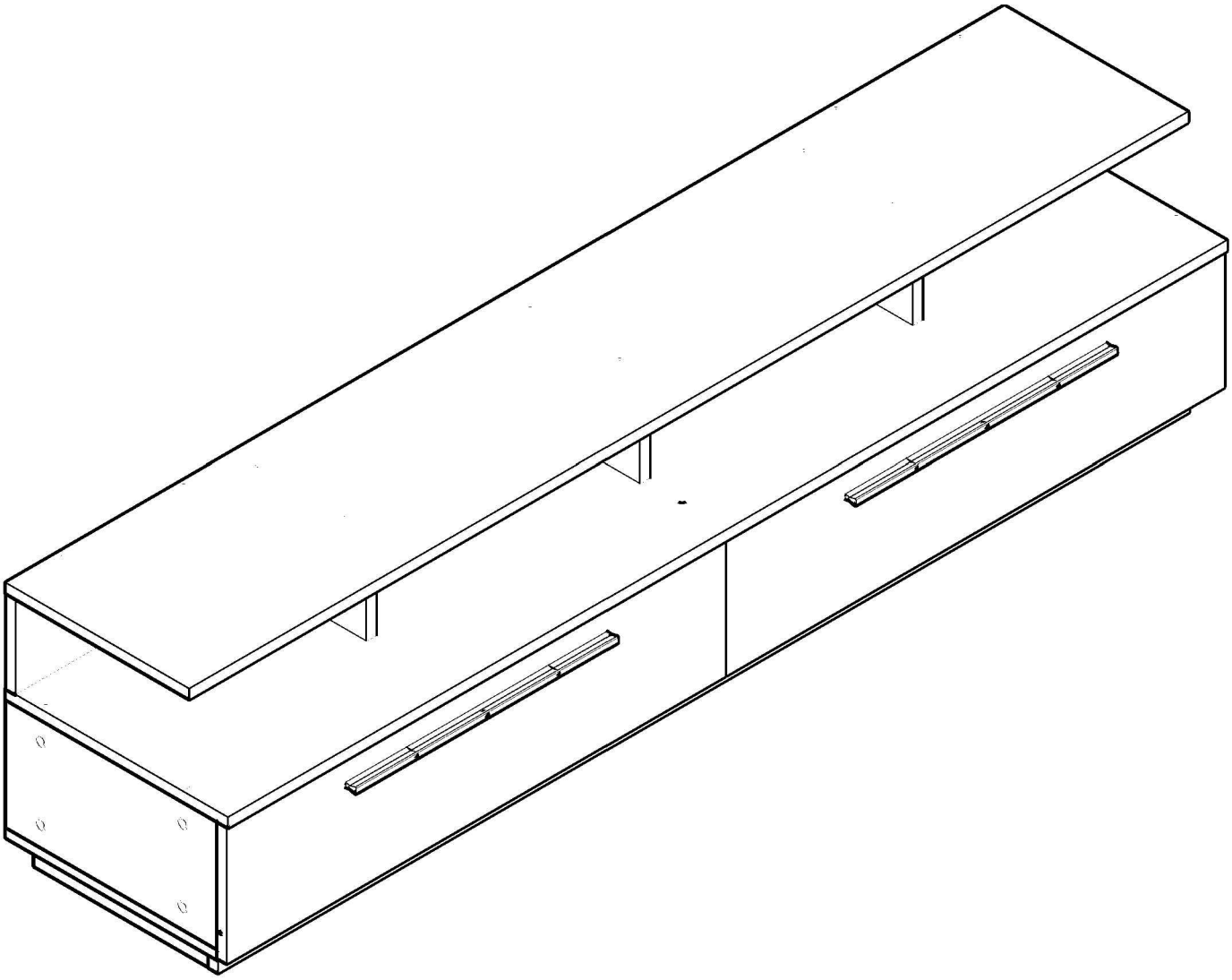

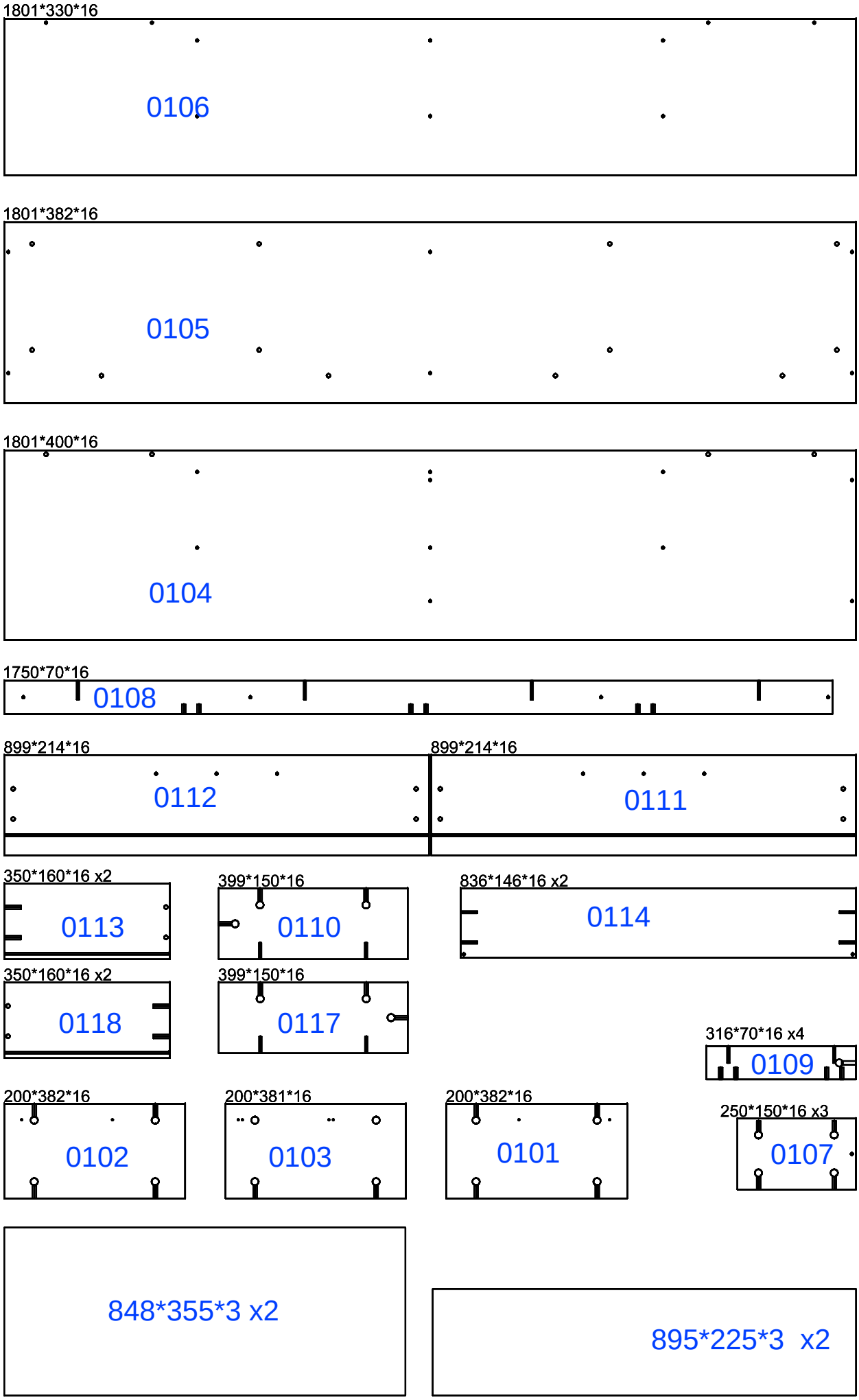
1801*330*16
0106
1801*382*16
0105
1801*400*16
0104
1750*70*16
0108
899*214*16
0112
899*214*16
0111
350*160*16 x2
0113
399*150*16
0110
836*146*16 x2
0114
350*160*16 x2
0118
399*150*16
0117
316*70*16 x4
0109
200*382*16
0102
200*381*16
0103
200*382*16
0101
250*150*16 x3
0107
848*355*3 x2
895*225*3 x2

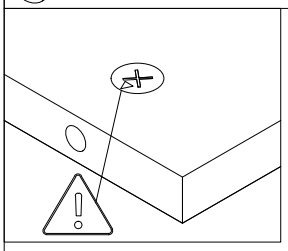

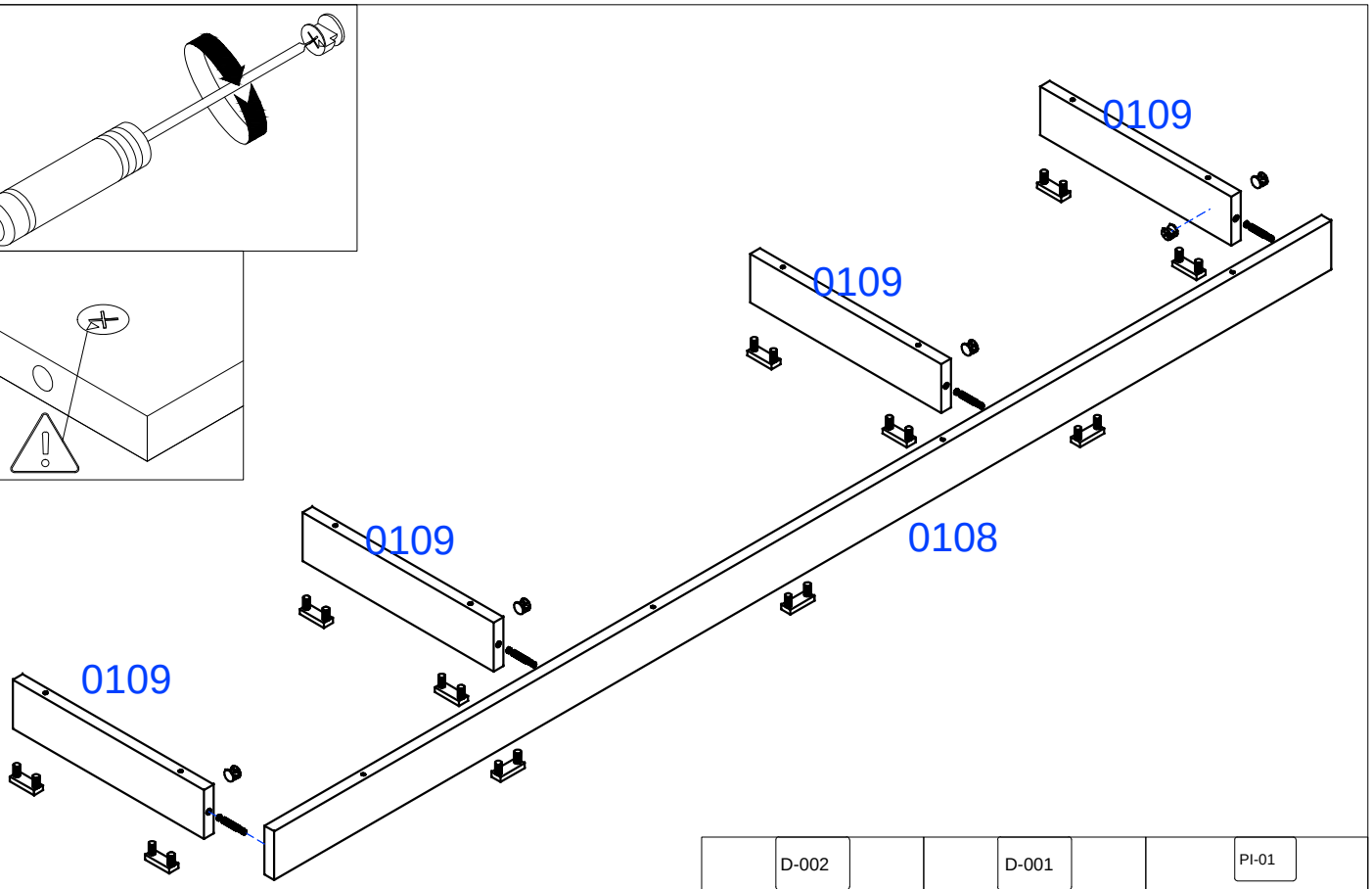

D-002	D-001	PI-01
	4 -buc	11 -buc

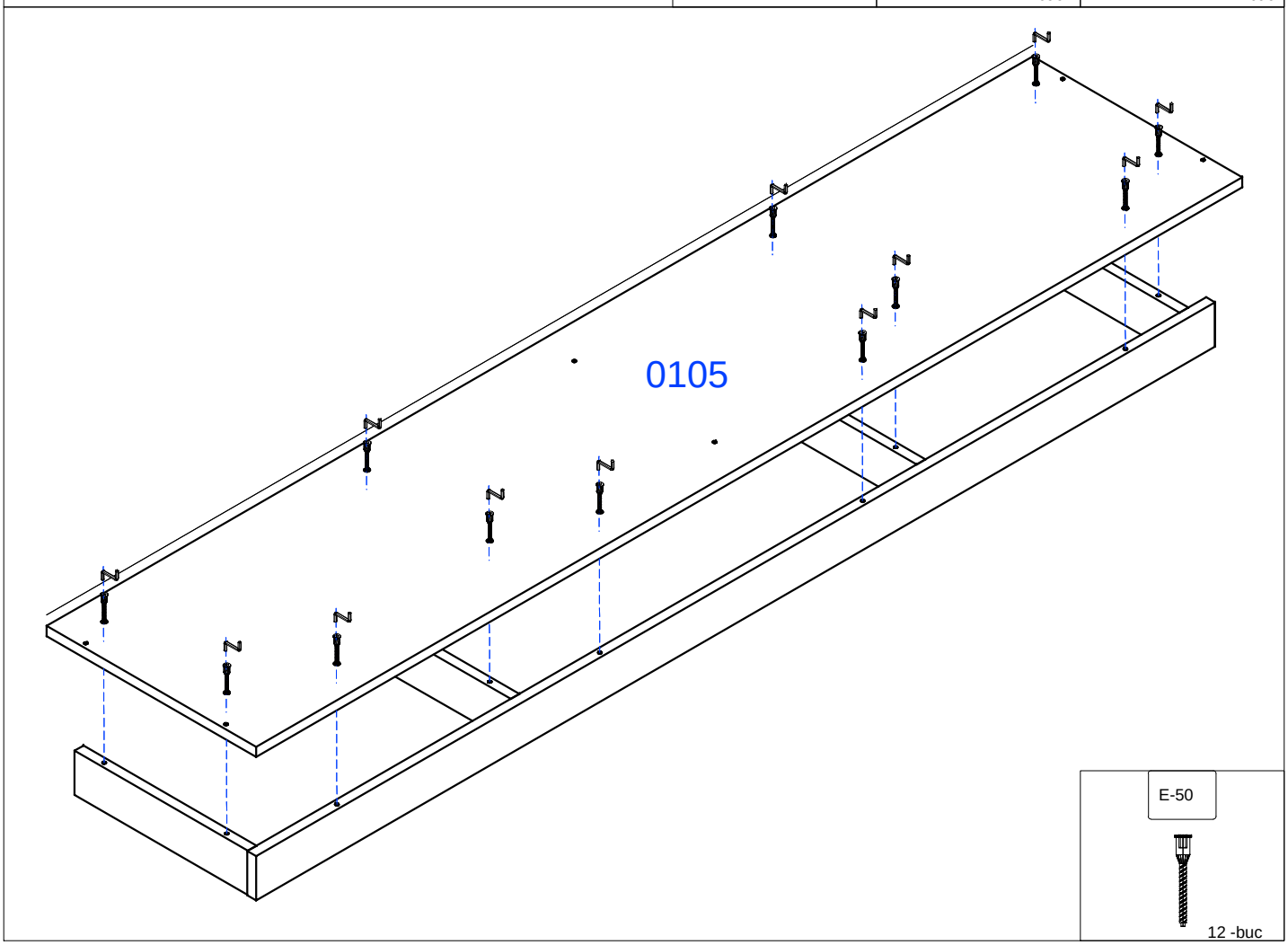

E-50

12 -buc

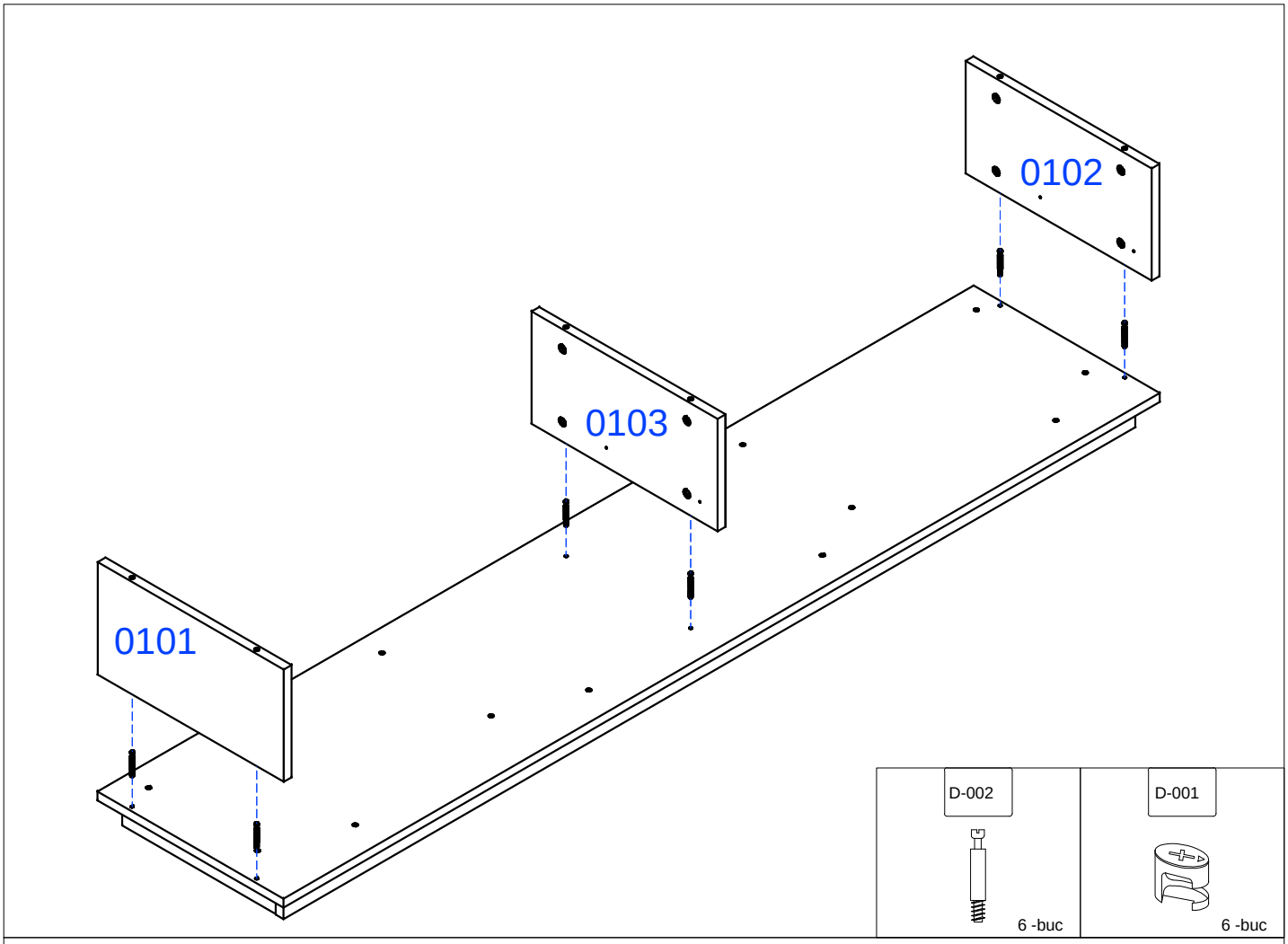
0102
0103
0101
D-002
6 -buc
D-001
6 -buc

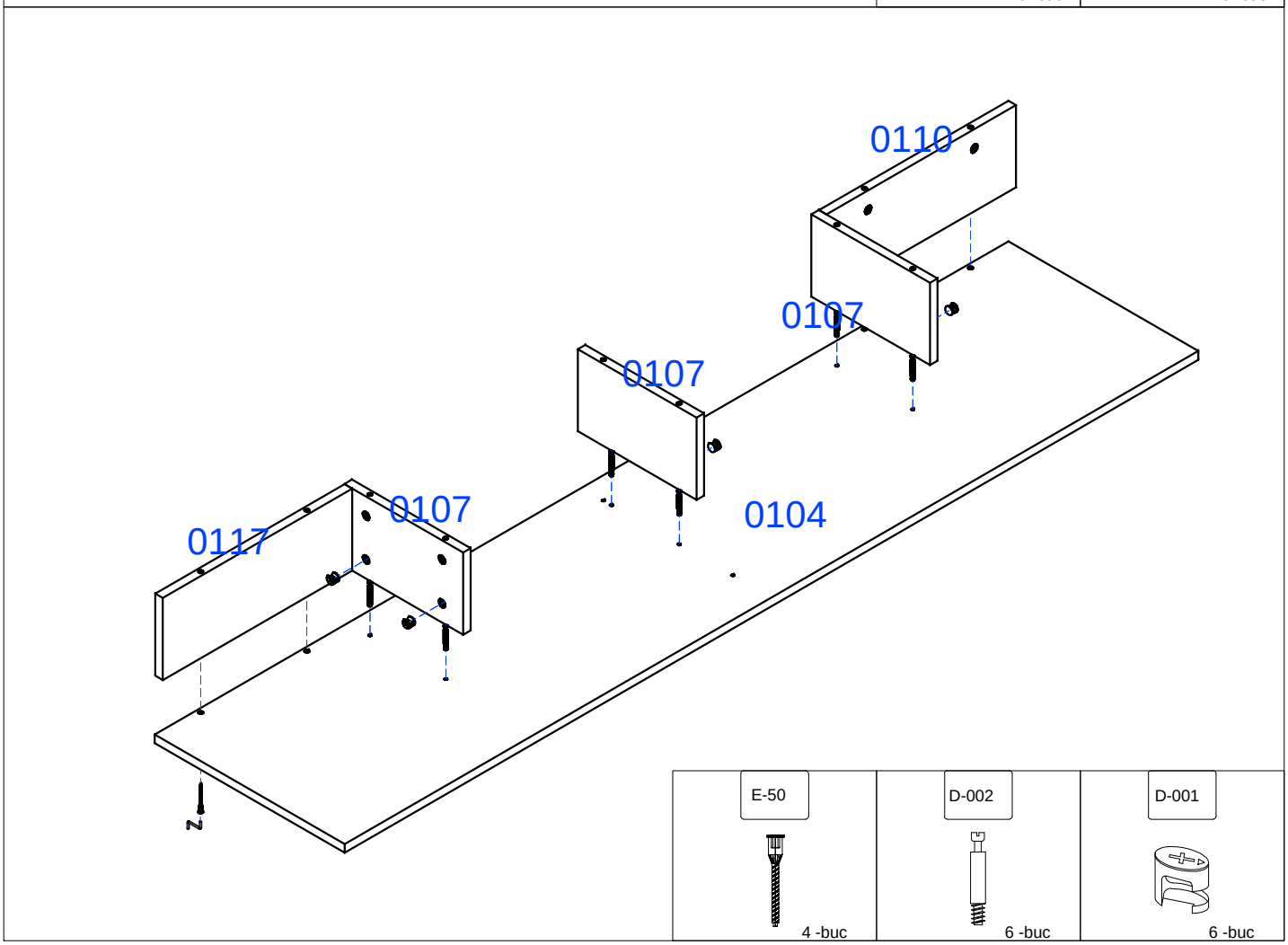
0110
0107
0107
0107
0117
0104
E-50
4 -buc
D-002
6 -buc
D-001
6 -buc

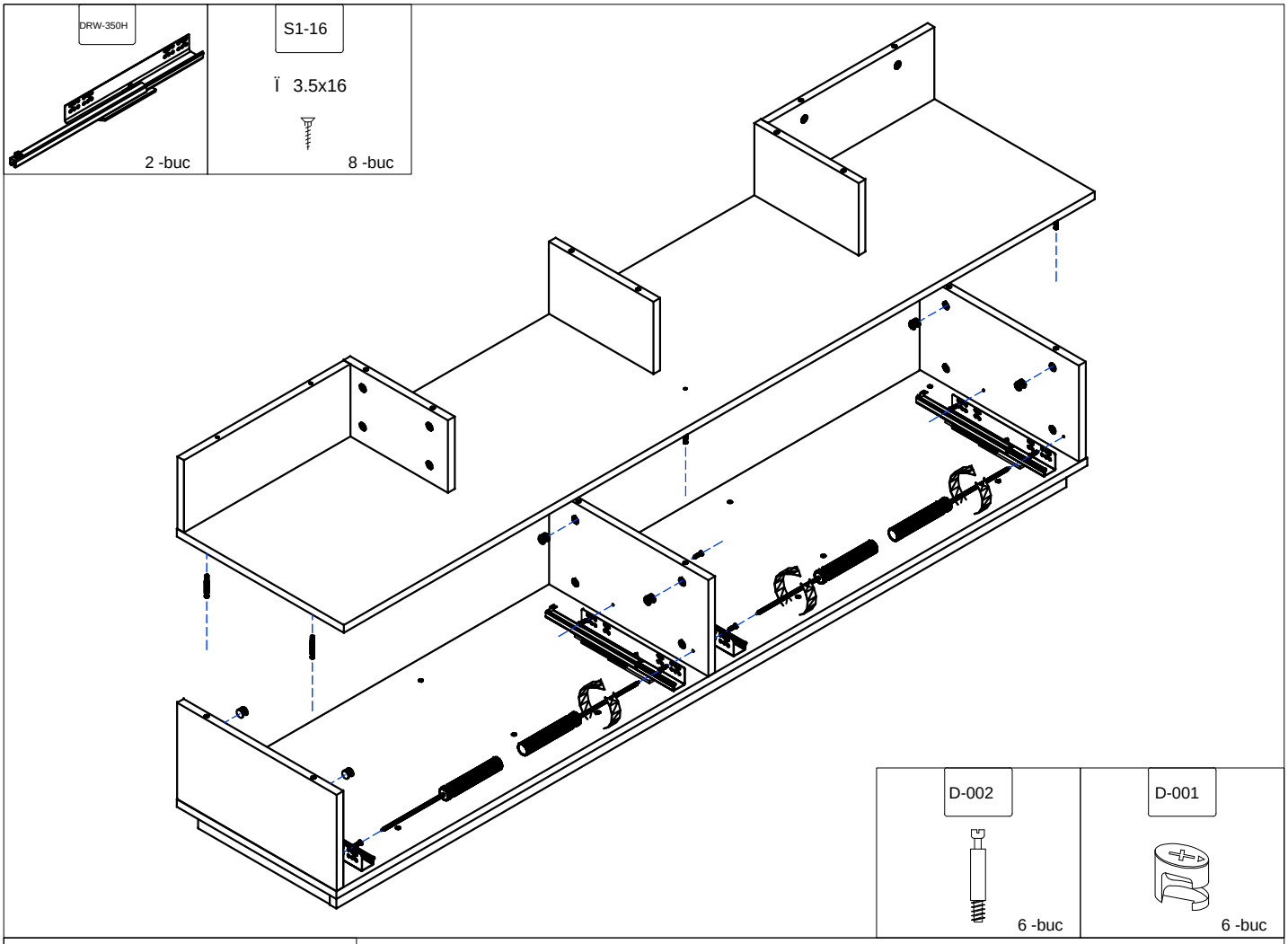
DRW-350H
2 -buc
S1-16
Ï 3.5x16
8 -buc
D-002
6 -buc
D-001
6 -buc

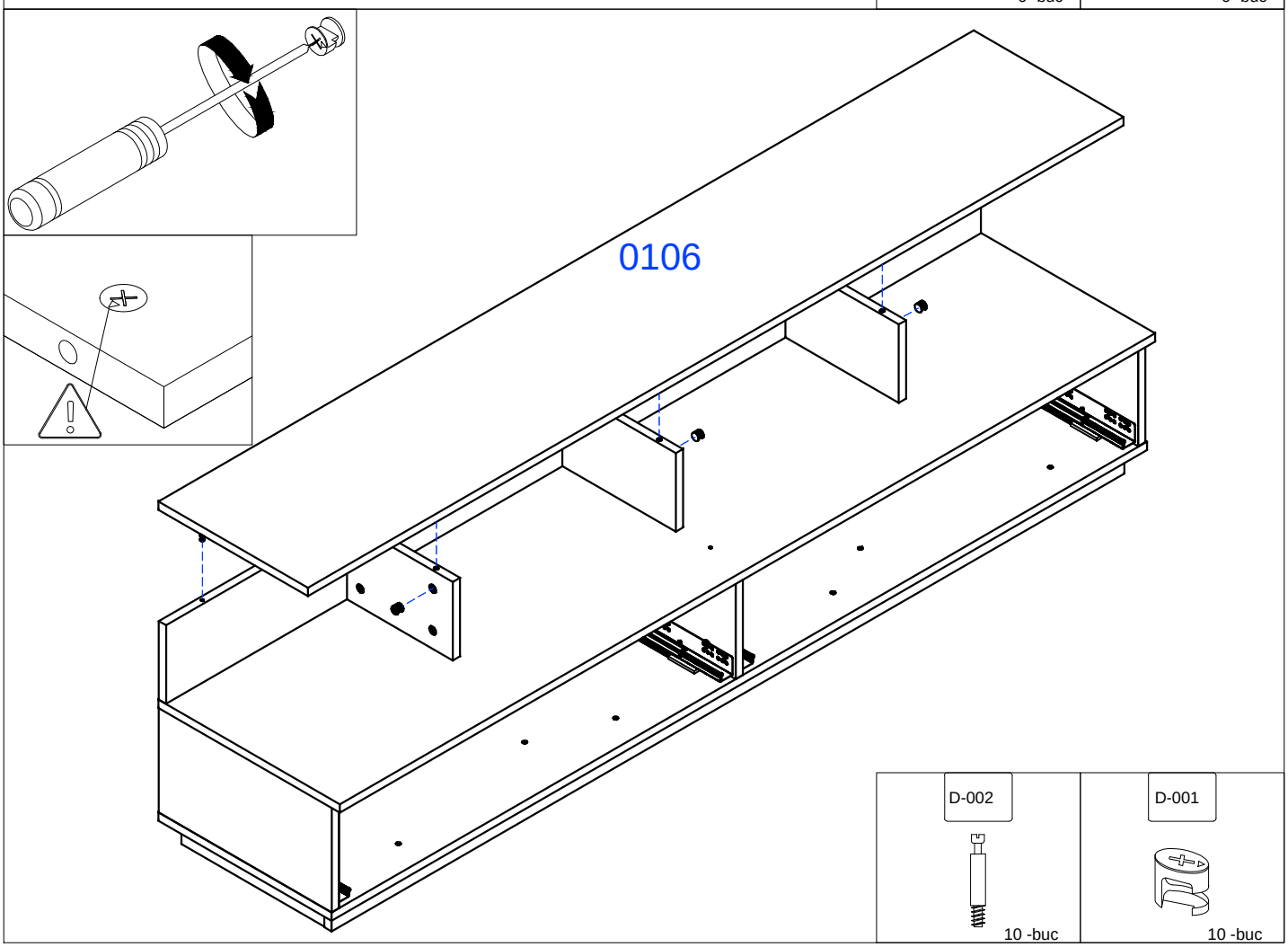
0106
D-002
10 -buc
D-001
10 -buc

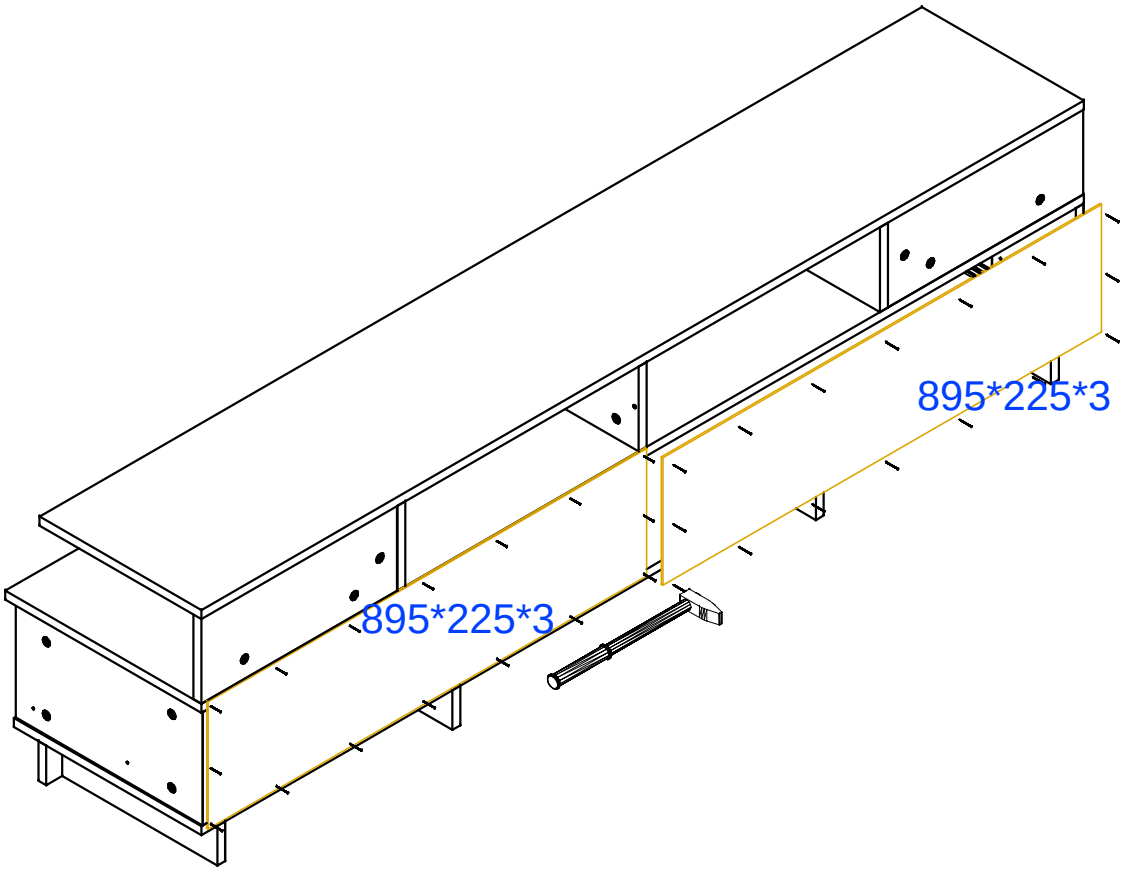
895*225*3
895*225*3

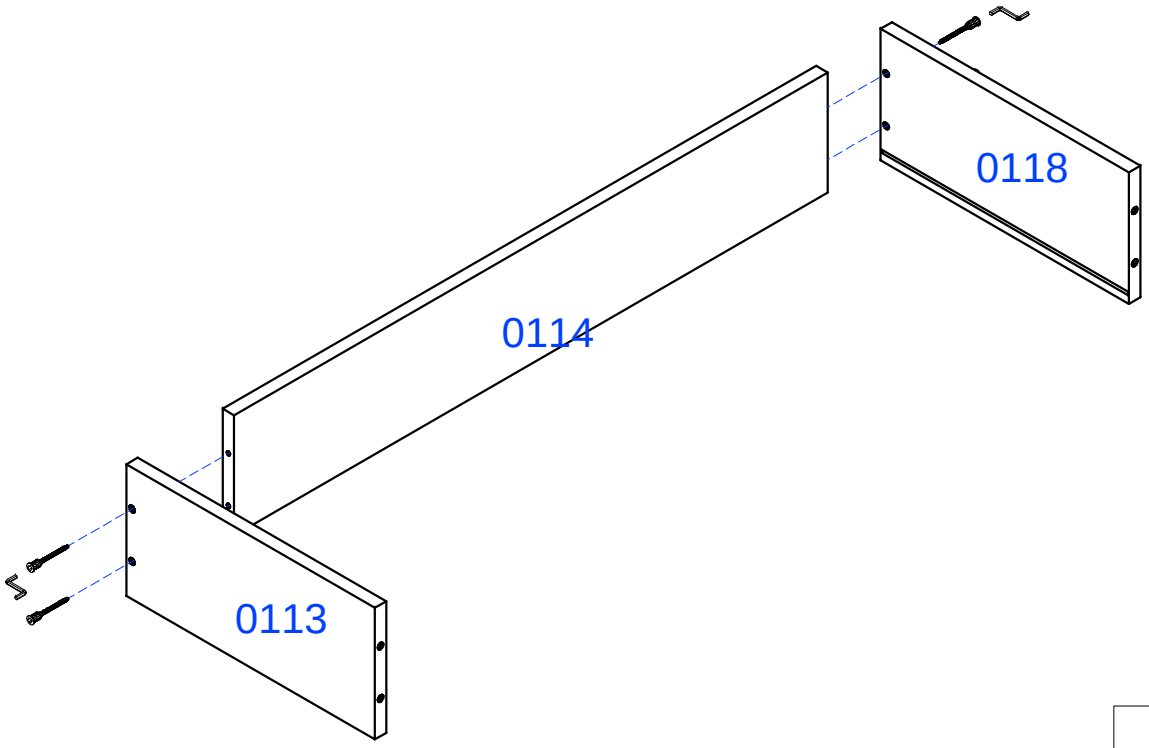
0118
0114
0113

E-50
4 -buc

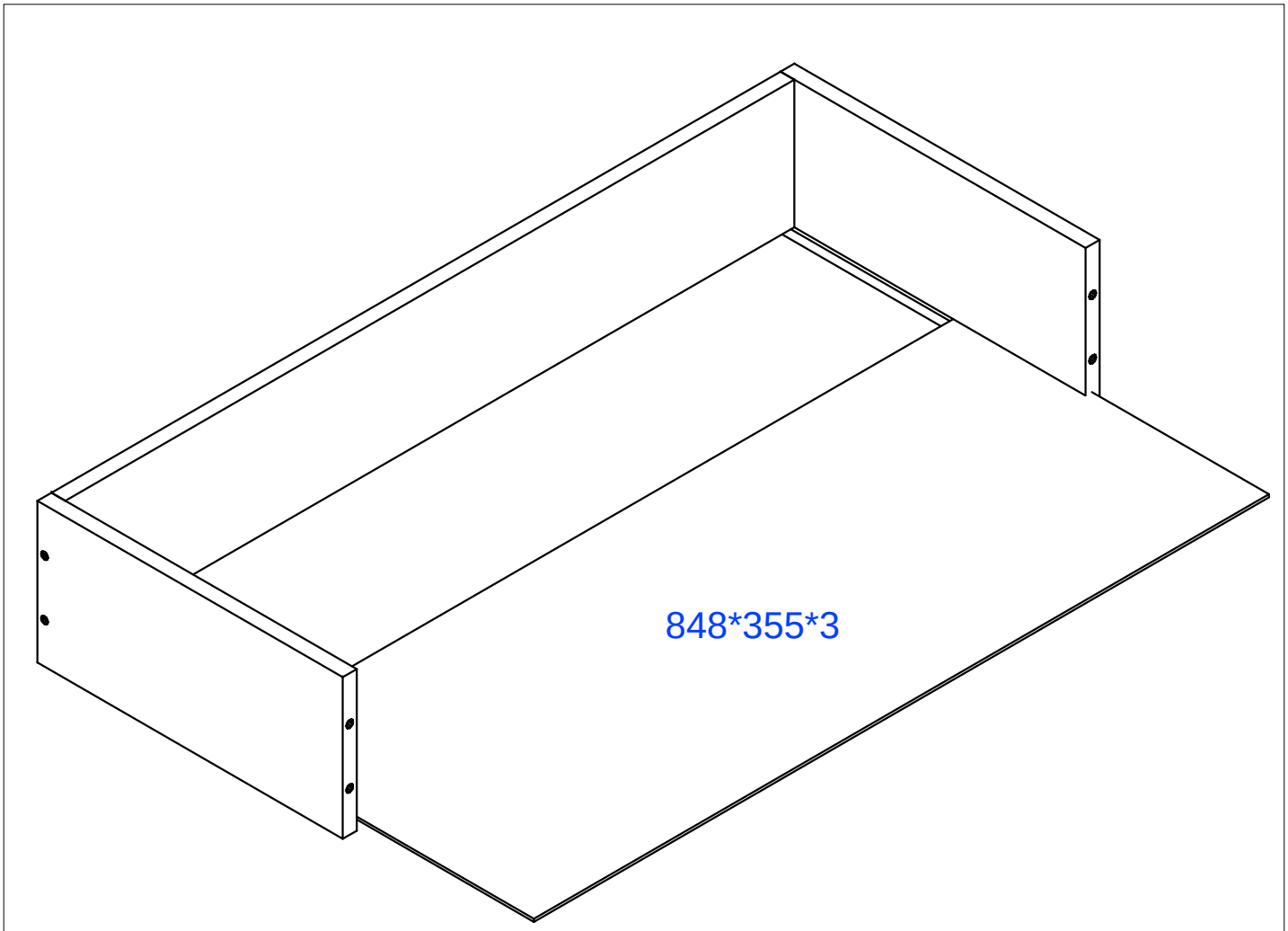
848*355*3

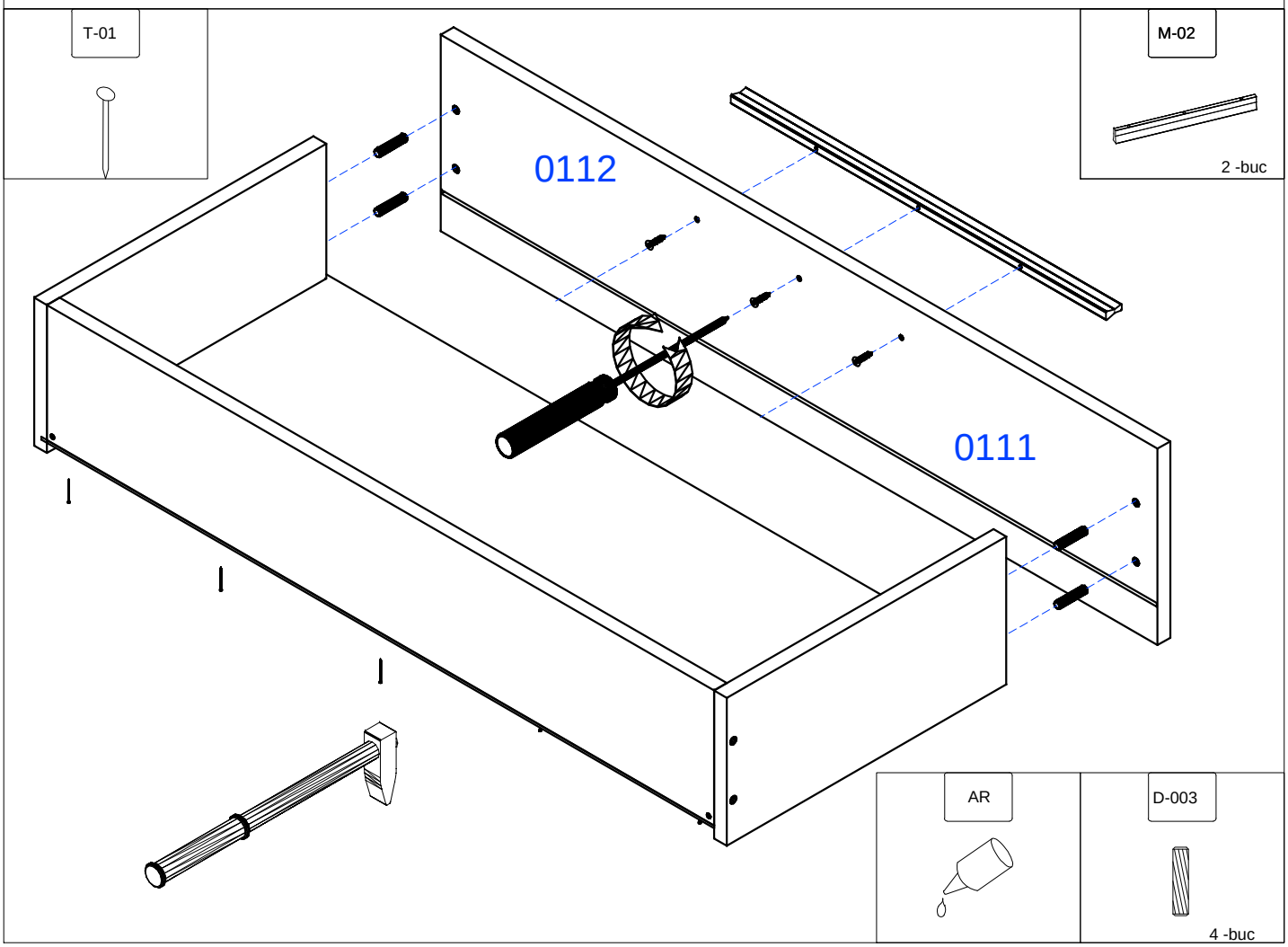
T-01
M-02
2 -buc
0112
0111
AR
D-003
4 -buc

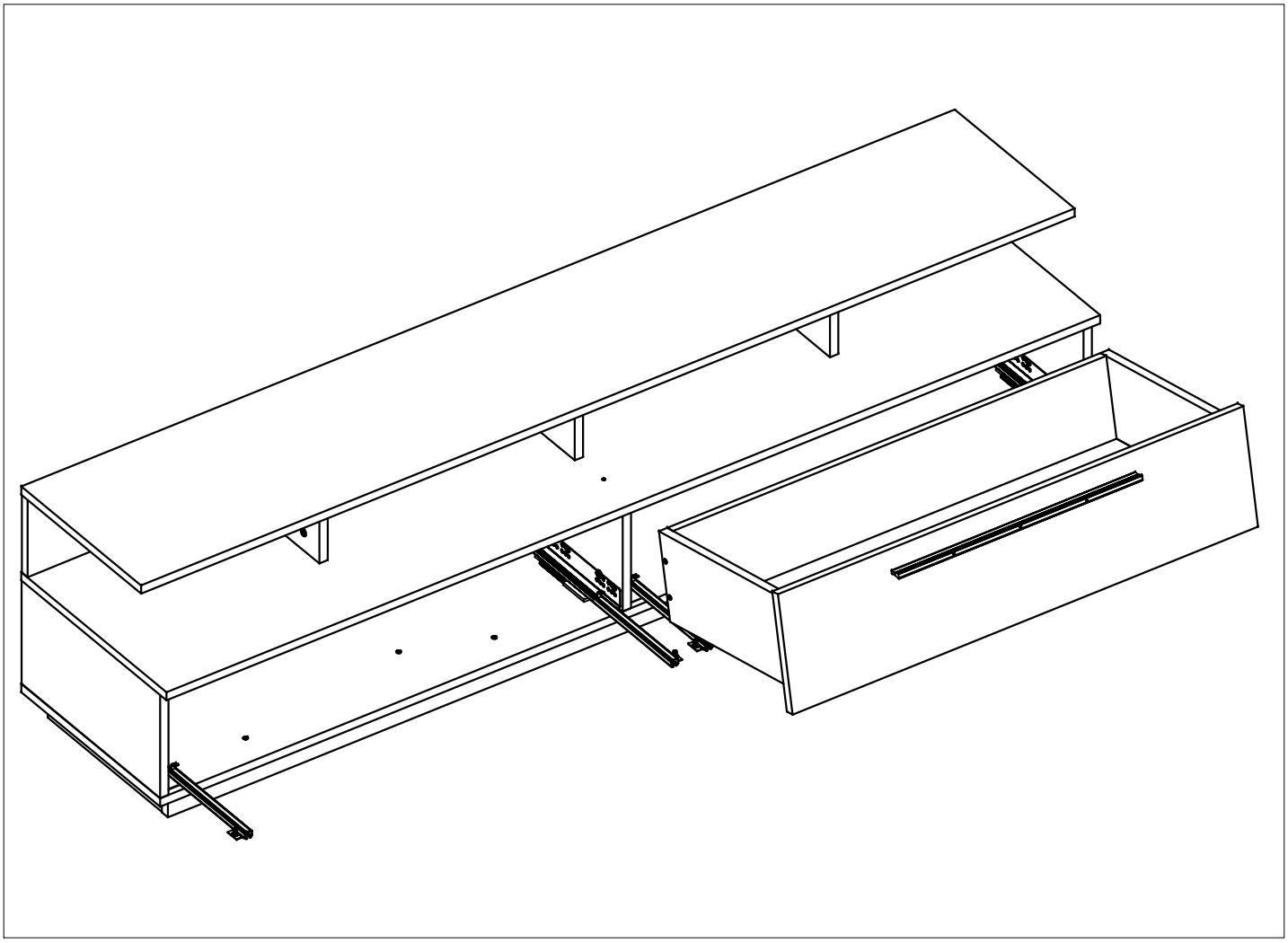

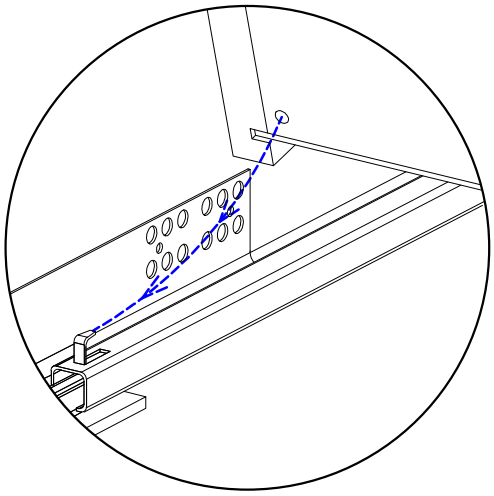

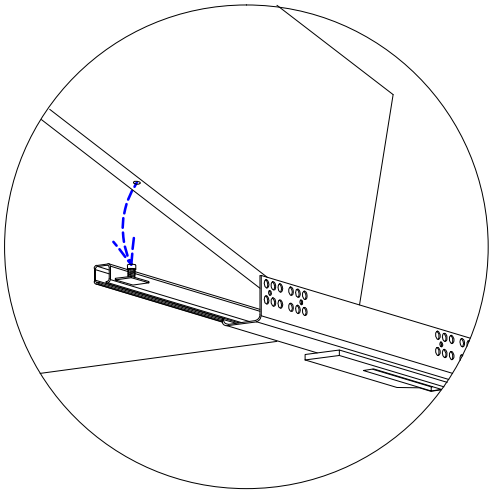

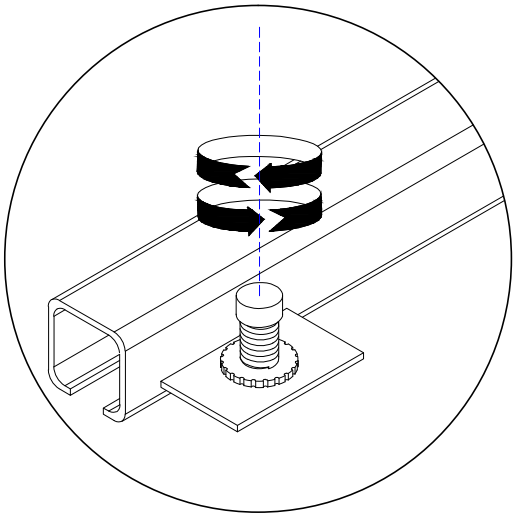

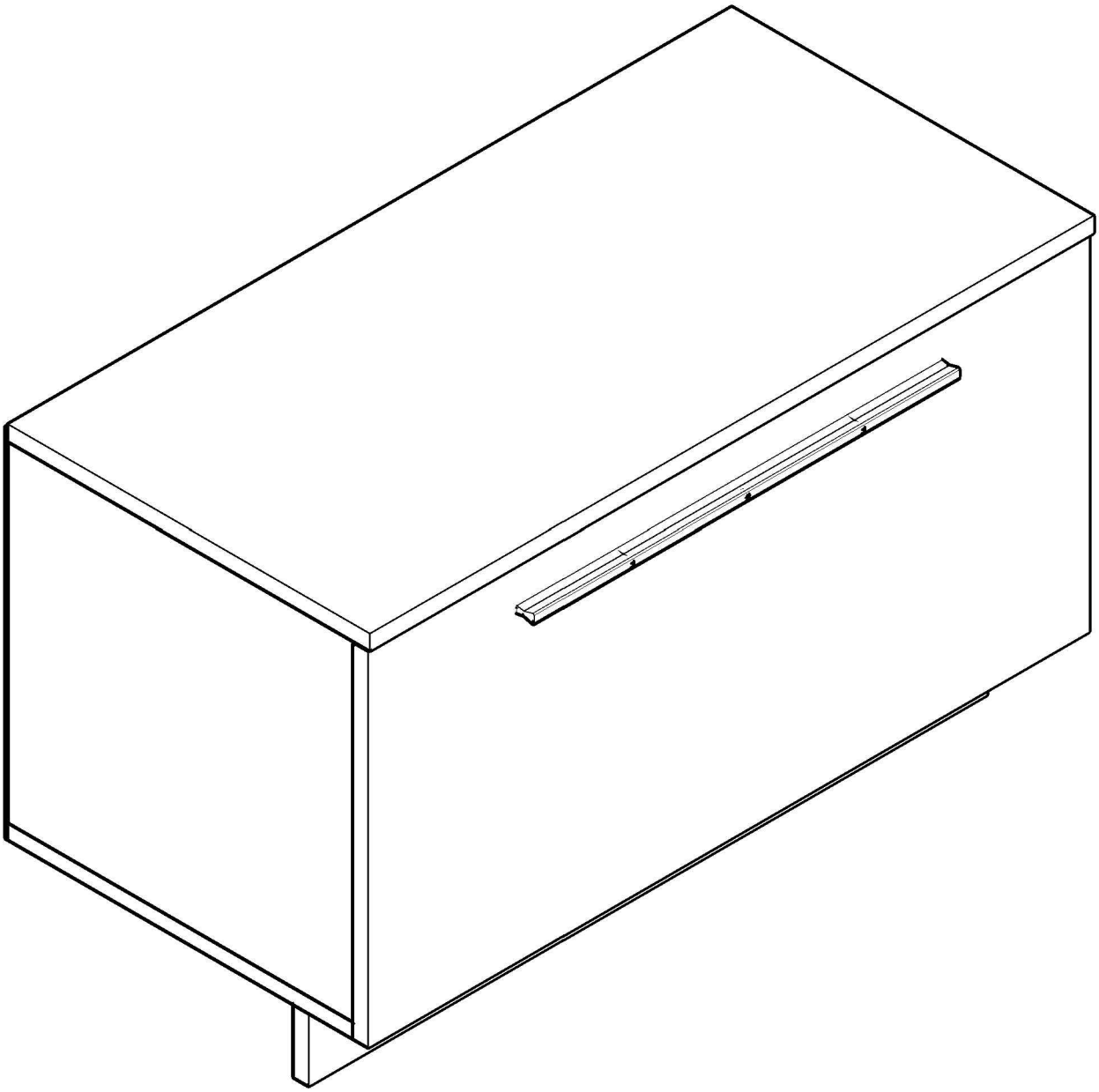

801*382*16

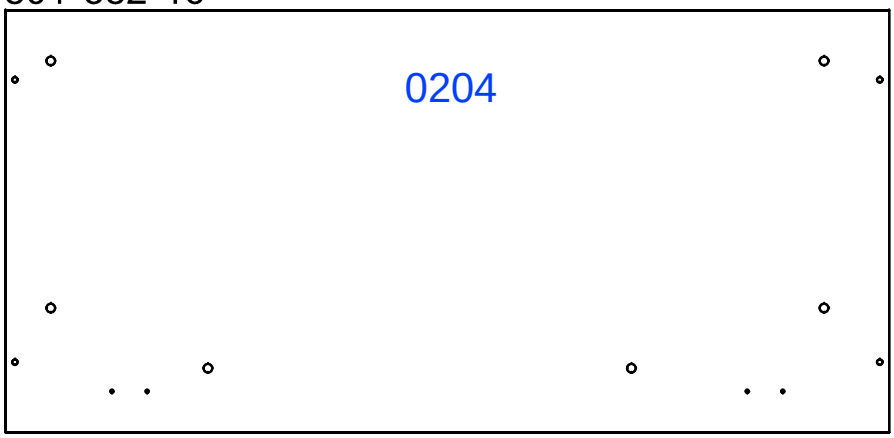

366*382*16

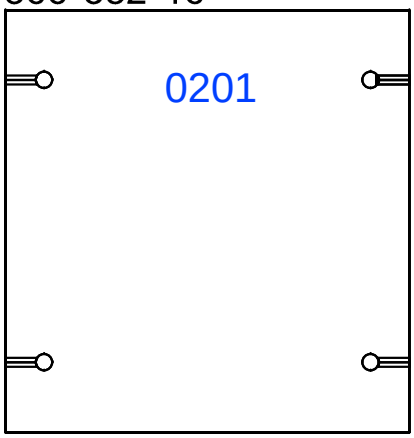

801*400*16

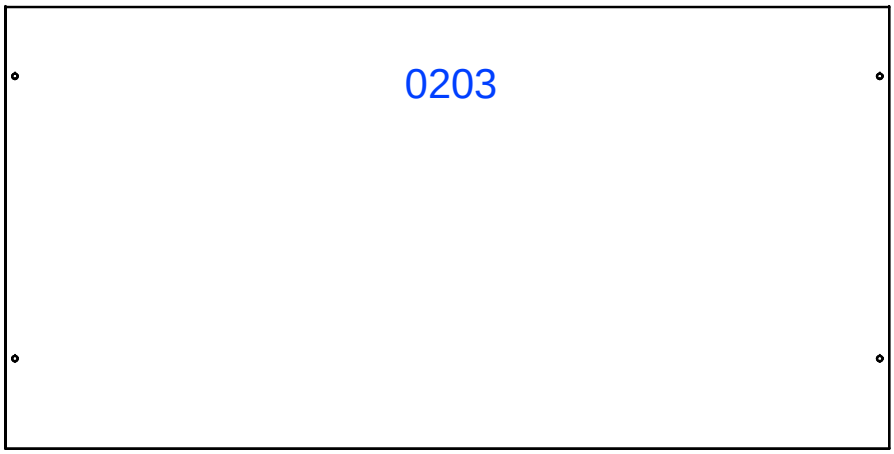

366*382*16

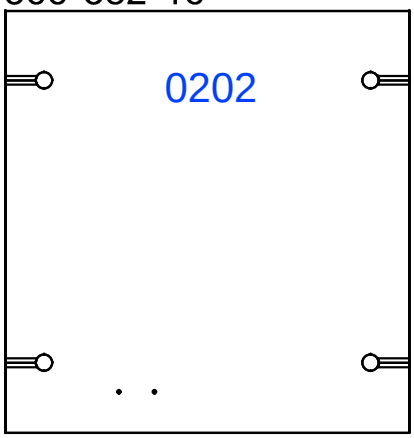

798*379*16

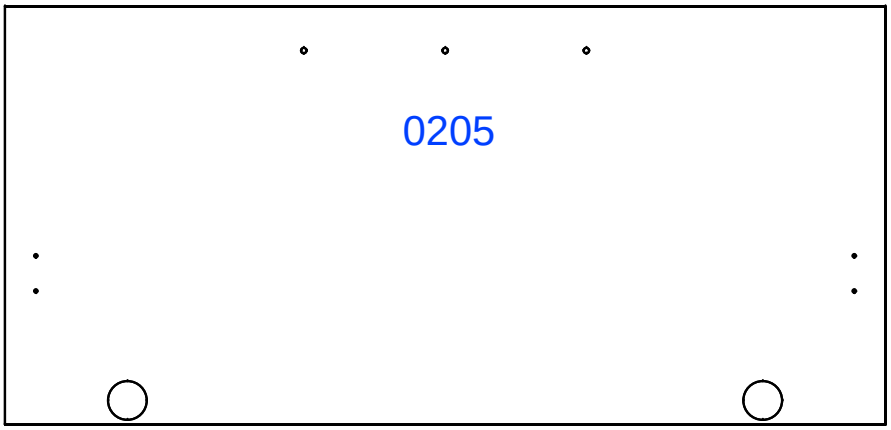

795*345*3

750*70*16

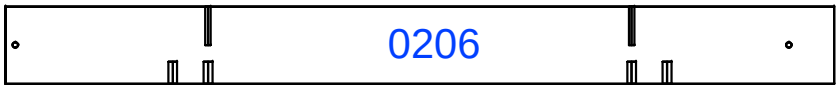

316*70*16

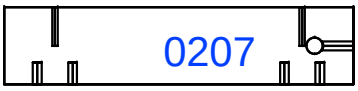

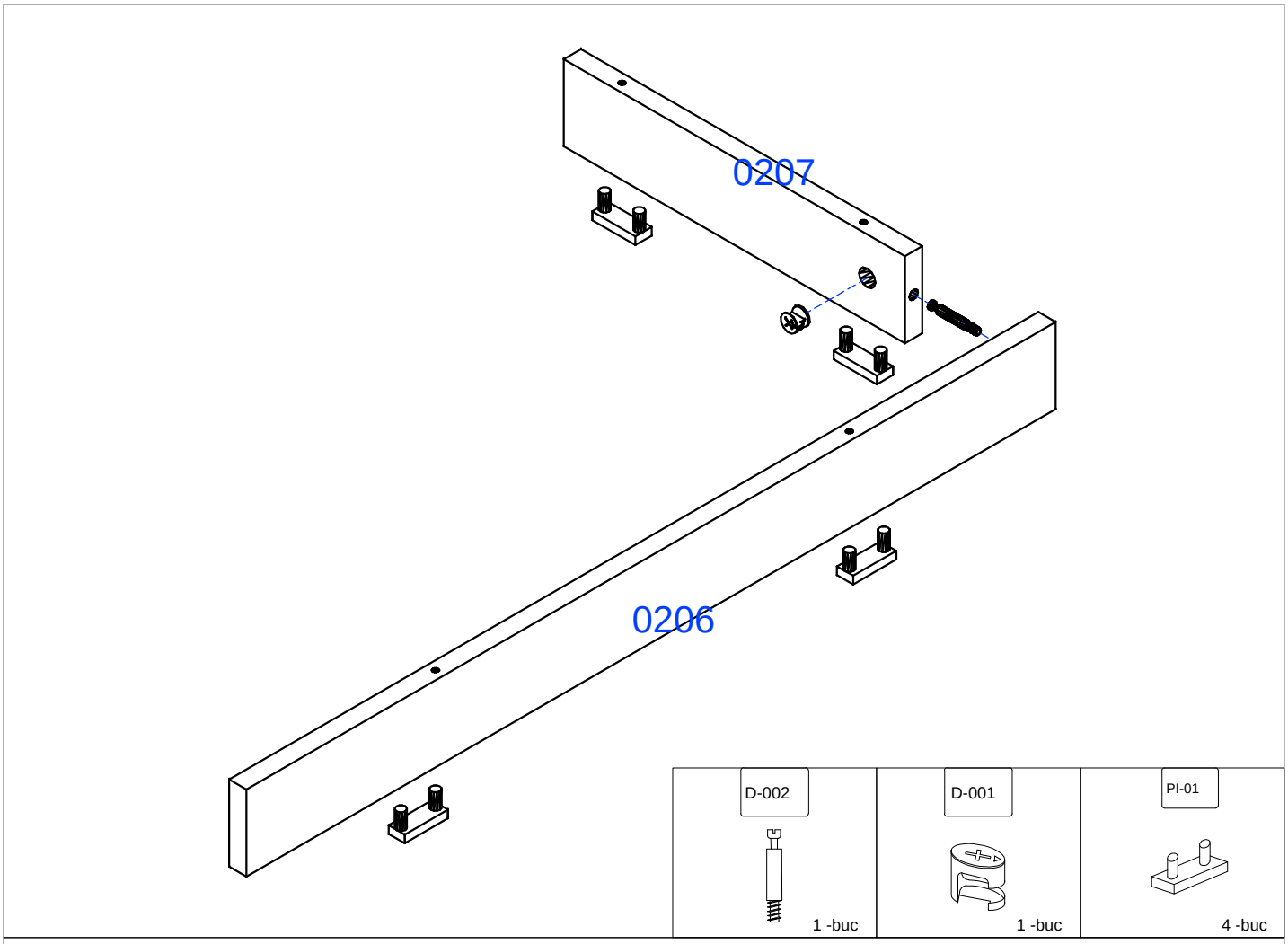
0207
0206
D-002
1 -buc
D-001
1 -buc
PI-01
4 -buc

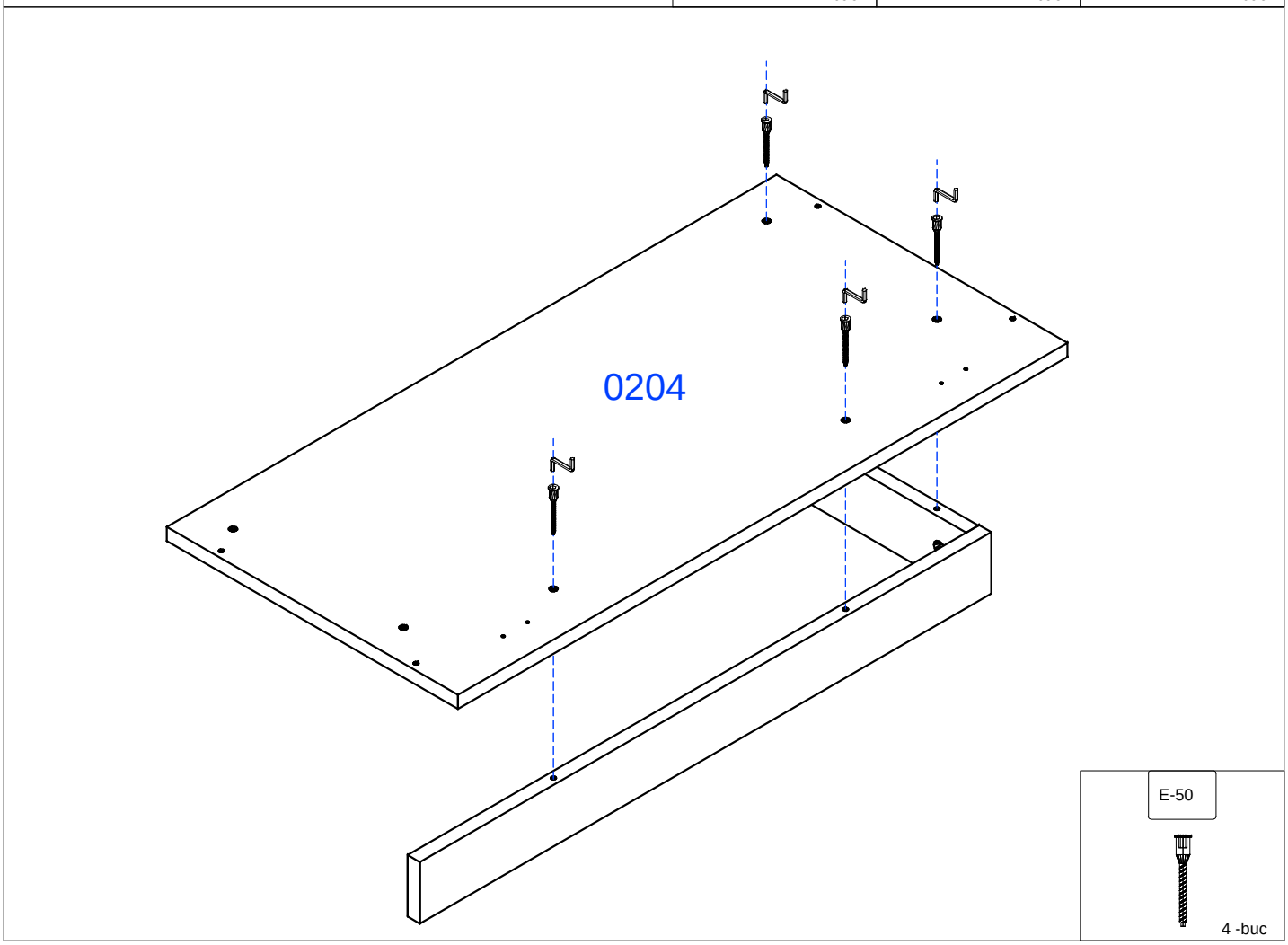
0204
E-50
4 -buc

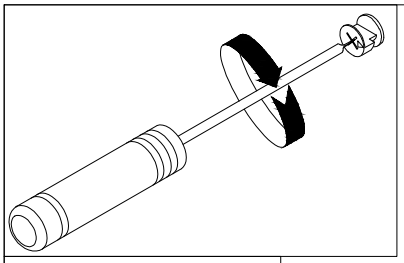

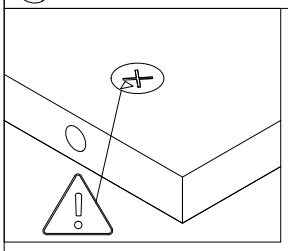

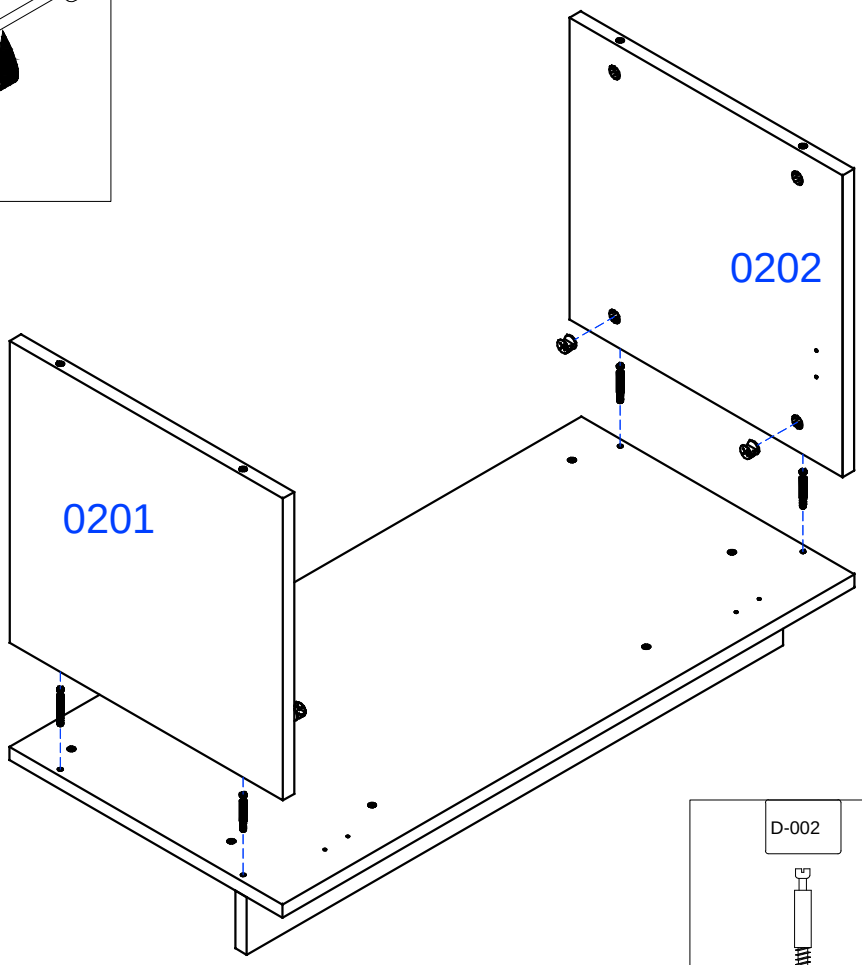

D-002	D-001
4 -buc	4 -buc

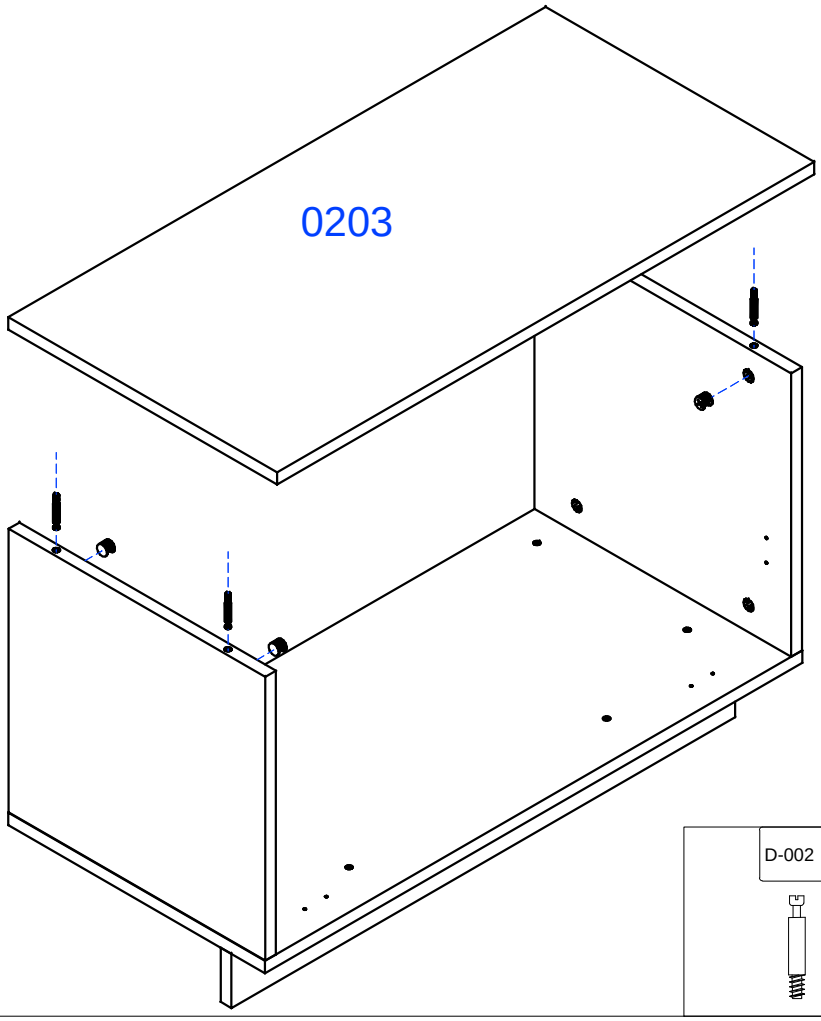

D-002	D-001
4 -buc	4 -buc

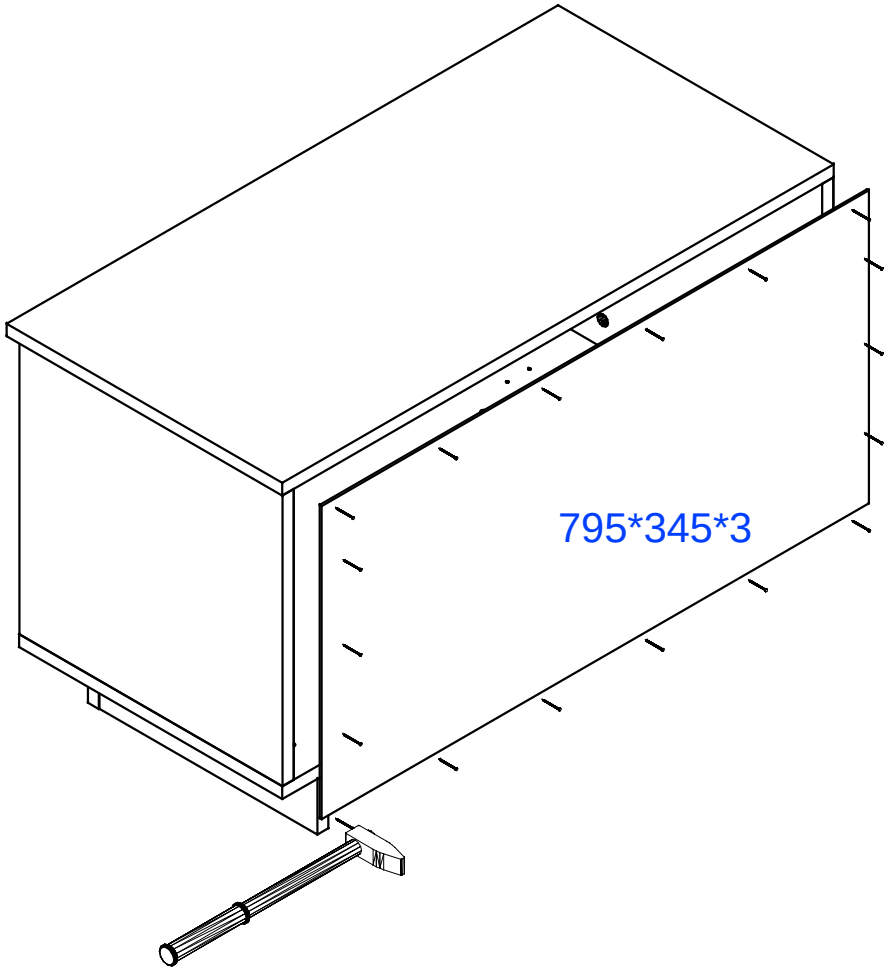

T-01

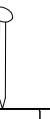

M-03

1 -buc

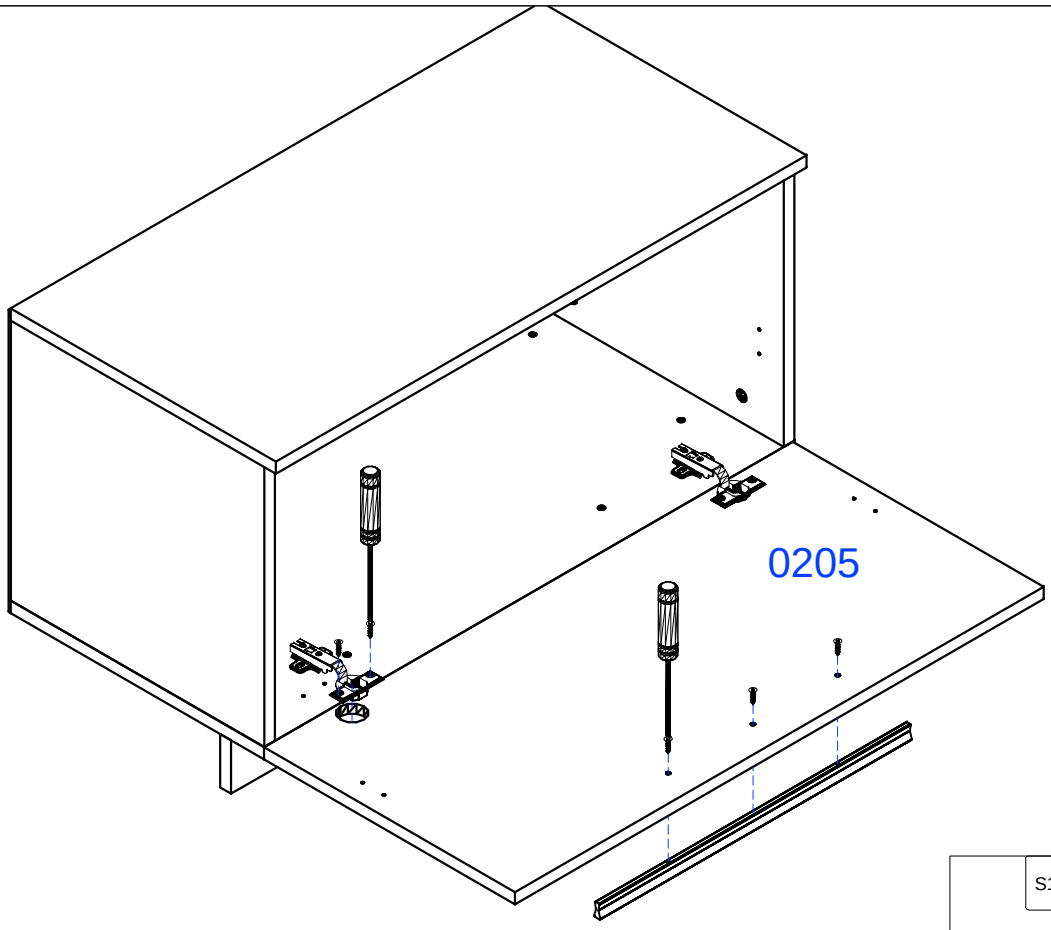

S1-16

Ï 3.5x16

8 -buc

B-01

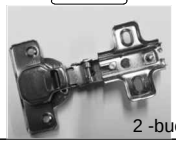

2 -buc

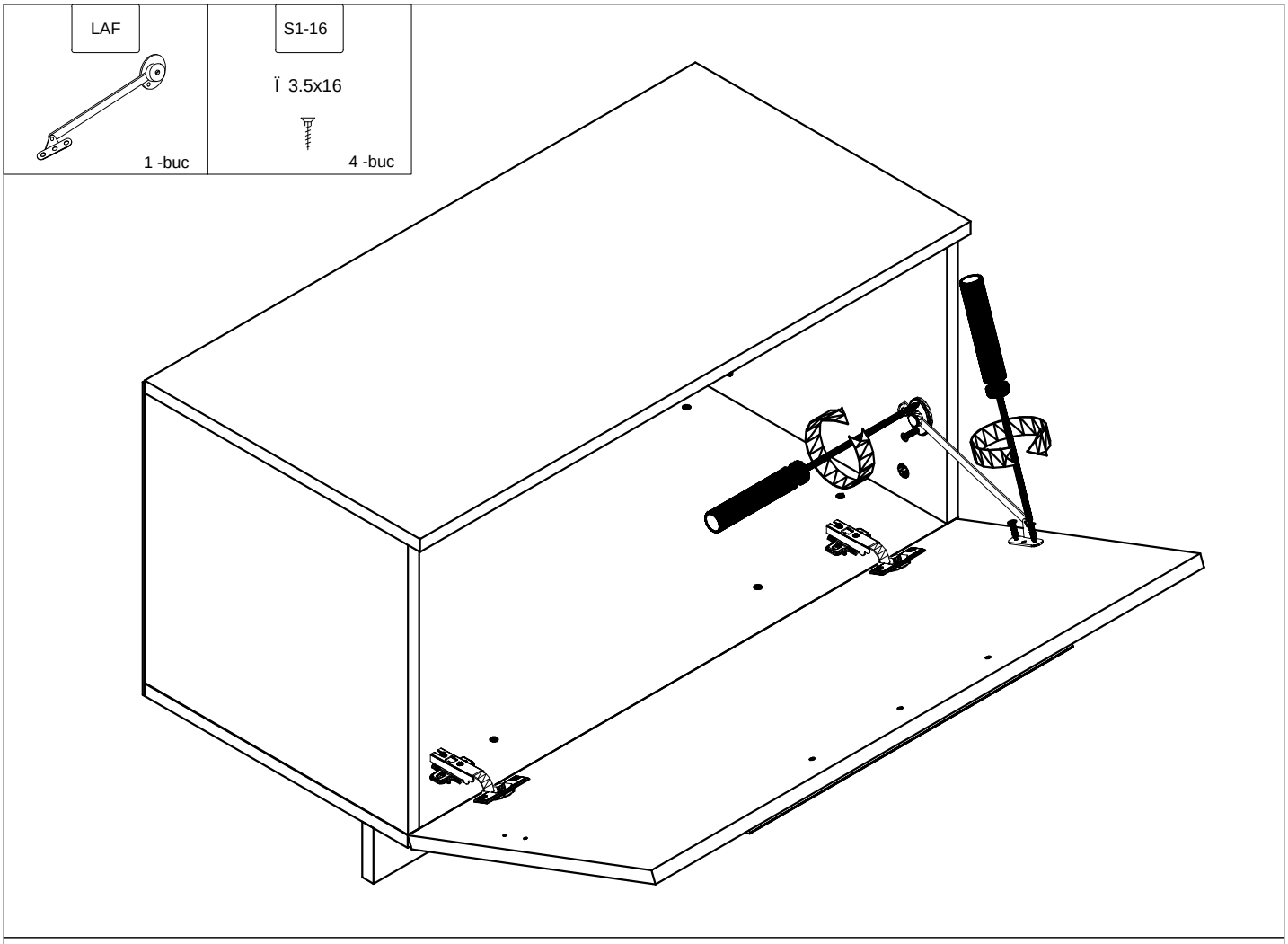
LAF
1 -buc
S1-16
Ï 3.5x16
4 -buc

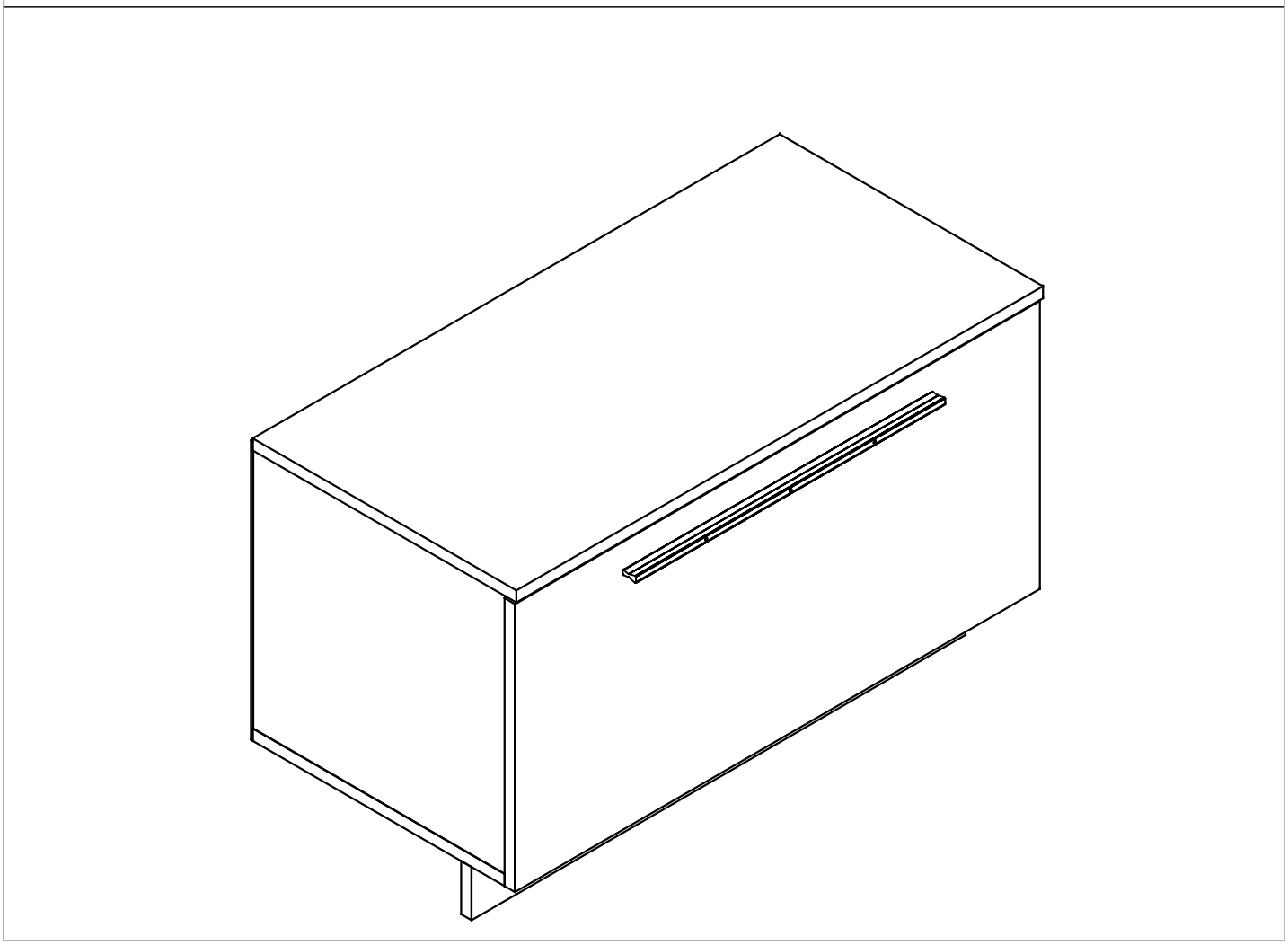

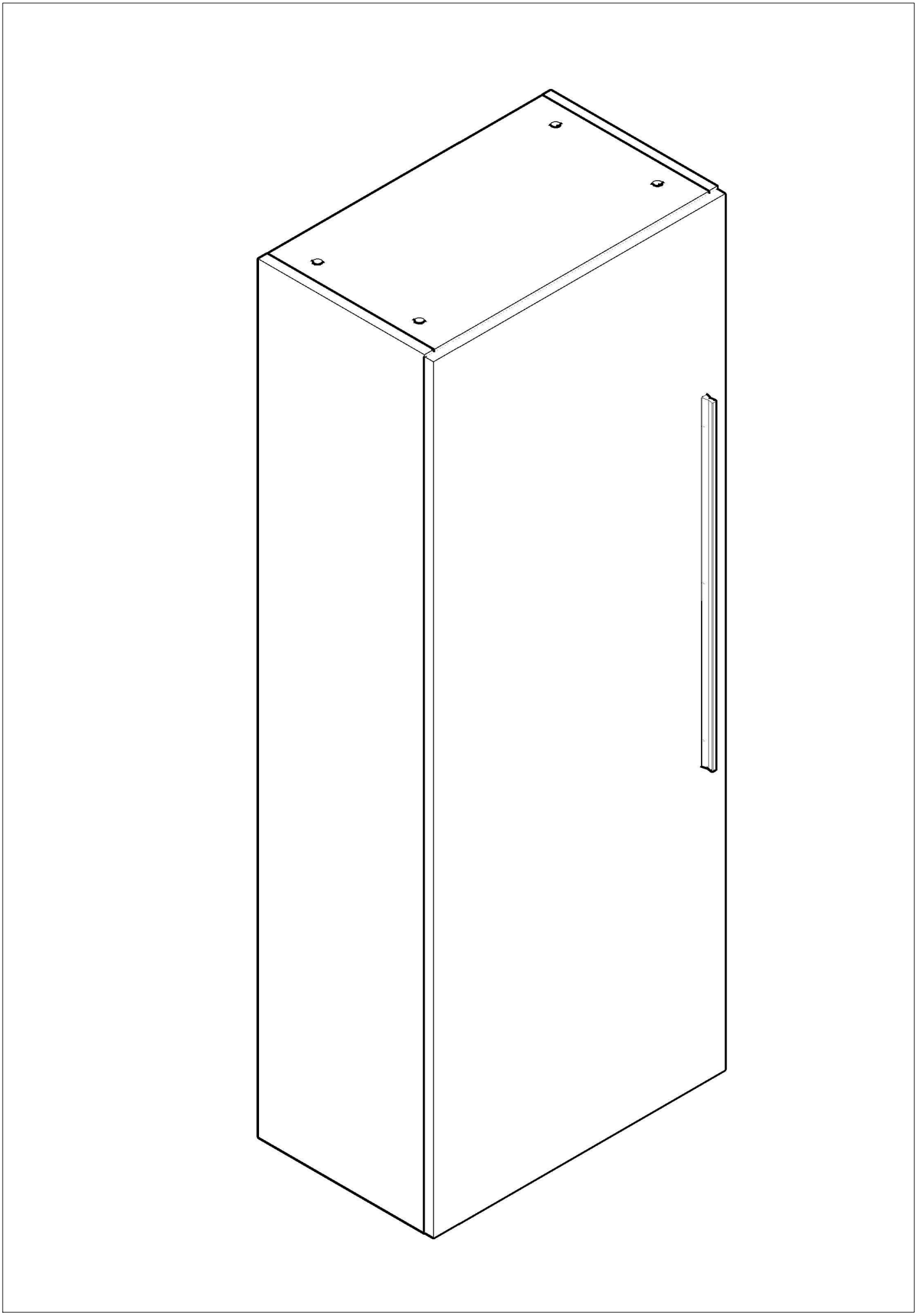

801*382*16

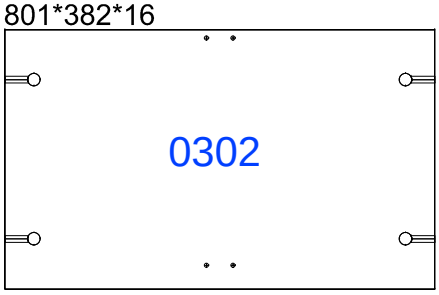

1432*312*16

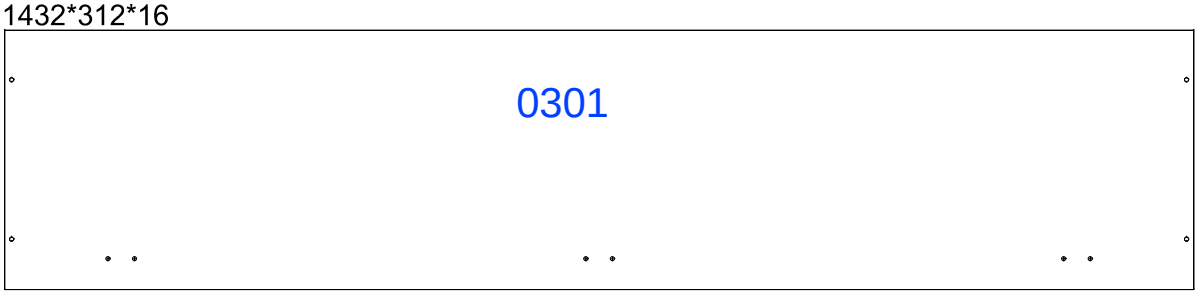

1428*547*16

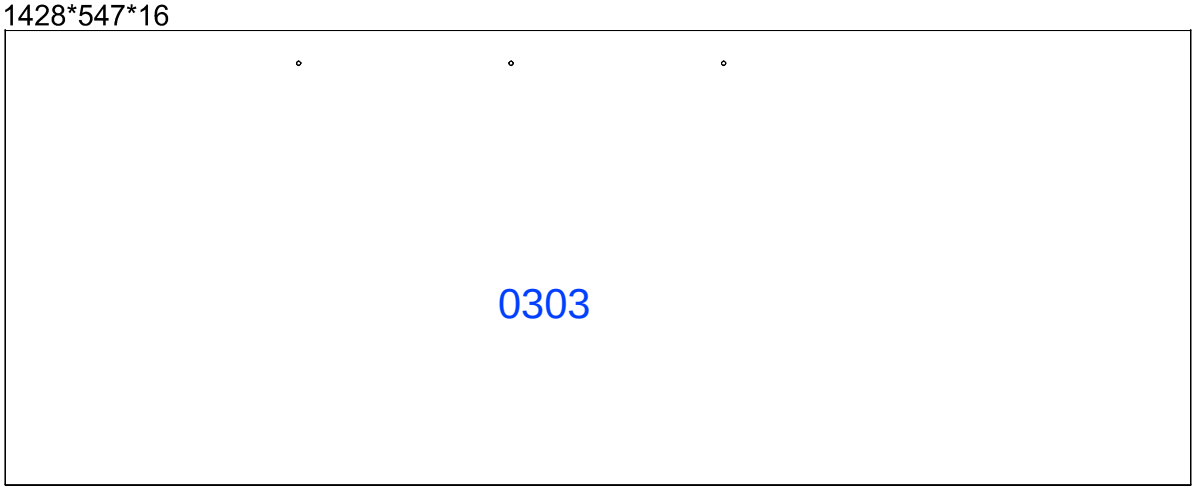

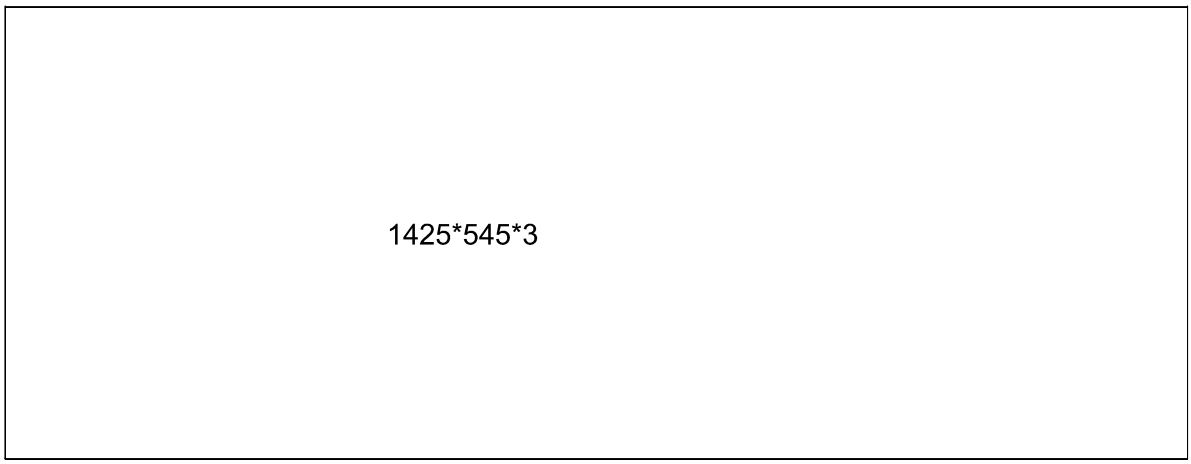

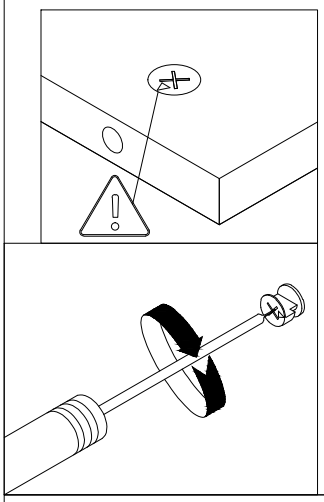

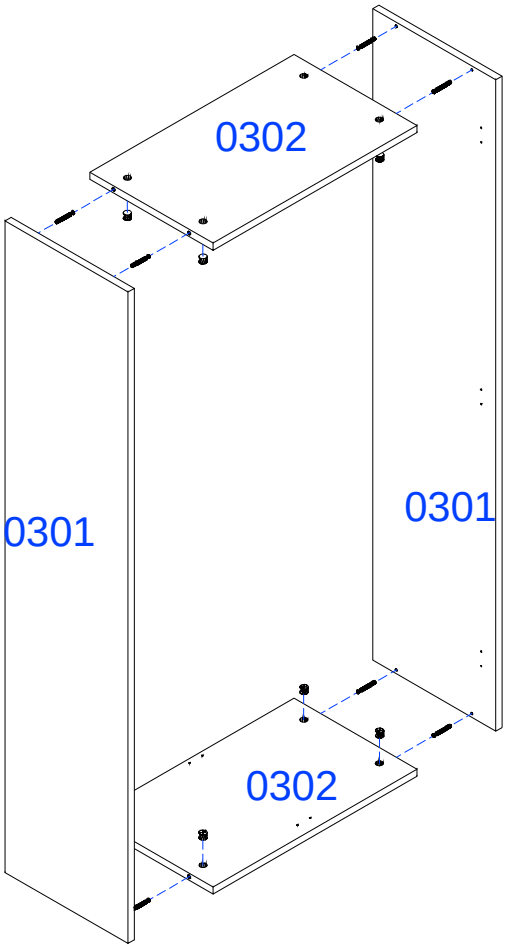
0302
0301
0301
0302

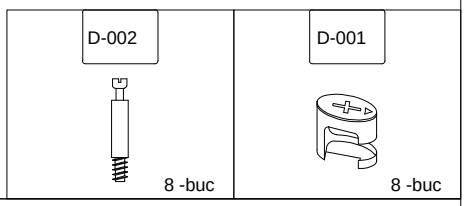
D-002
8 -buc
D-001
8 -buc

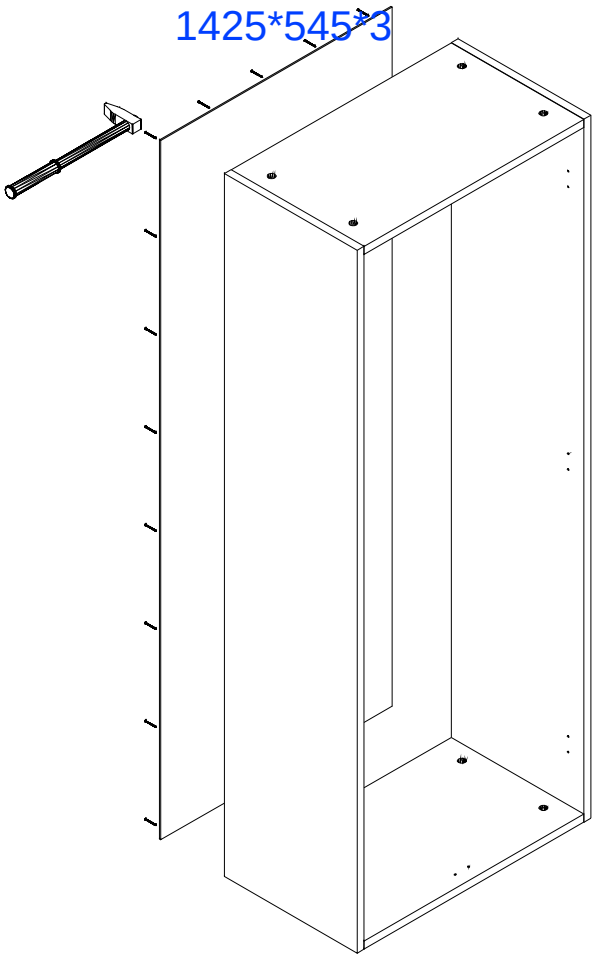
1425*545*3

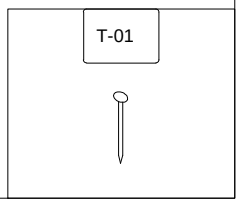
T-01

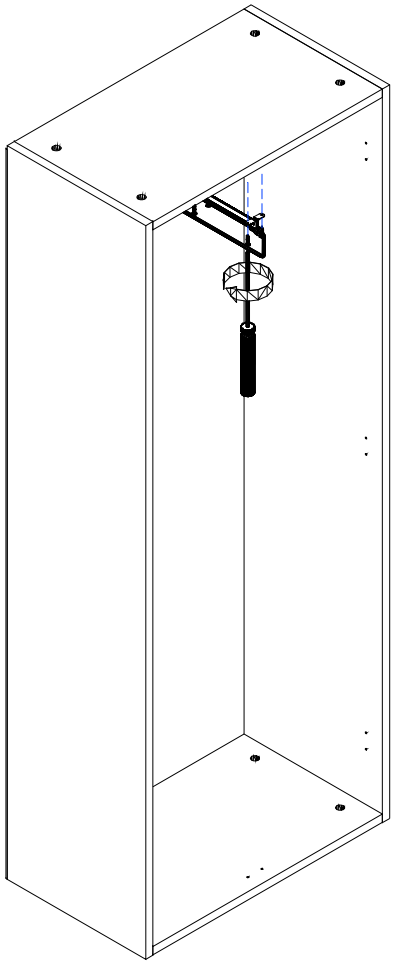

SU

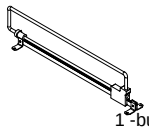

1 -buc

S1-16

Ï 3.5x16

4 -buc

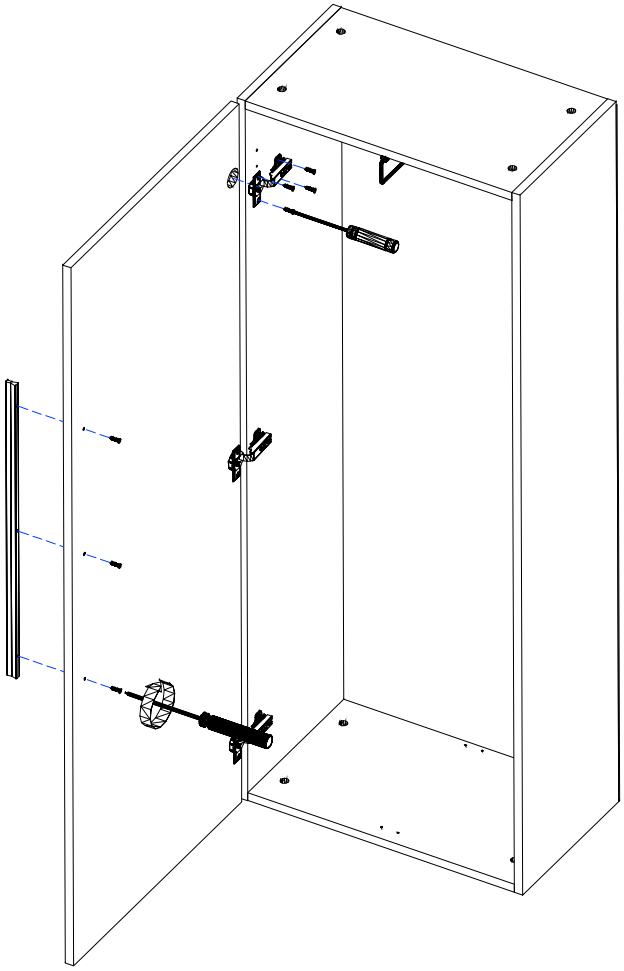

S1-16

Ï 3.5x16

12 -buc

BA-01

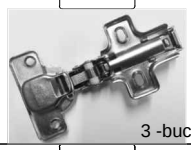

3 -buc

M-03

1 -buc

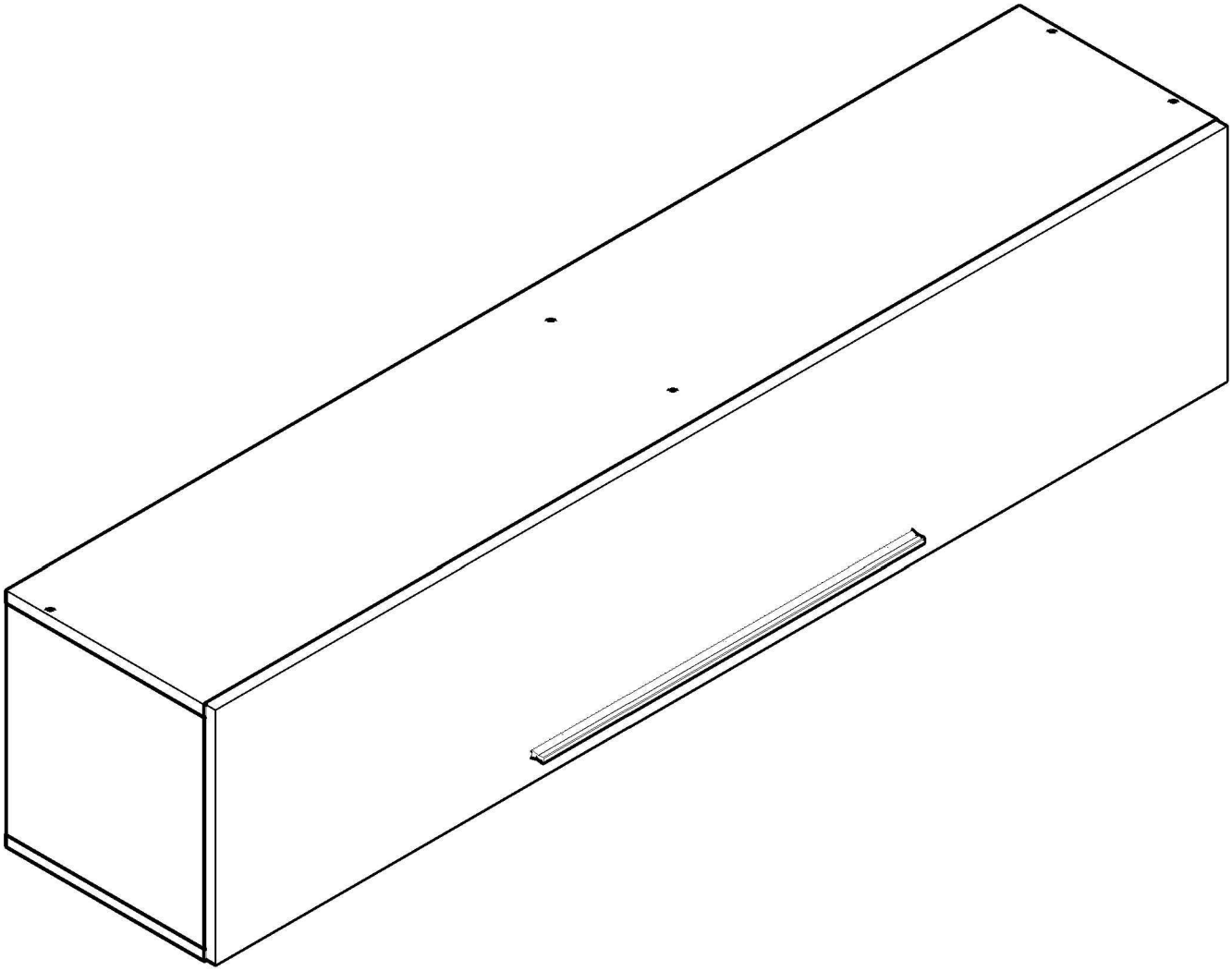

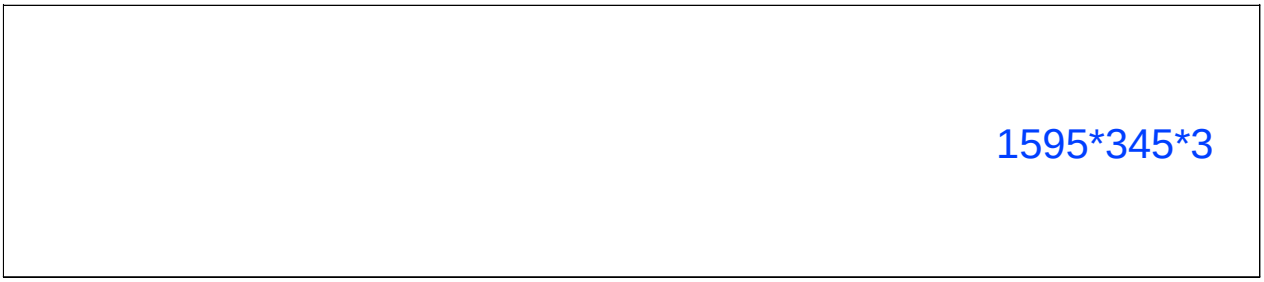

1597*347*16

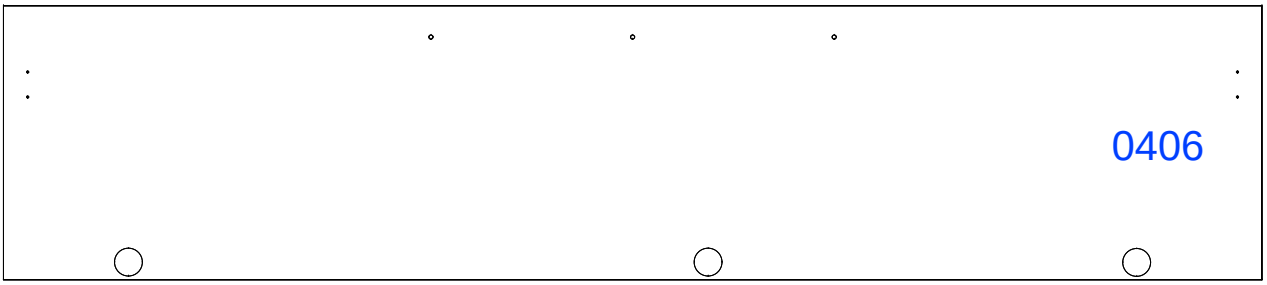

1600*312*16

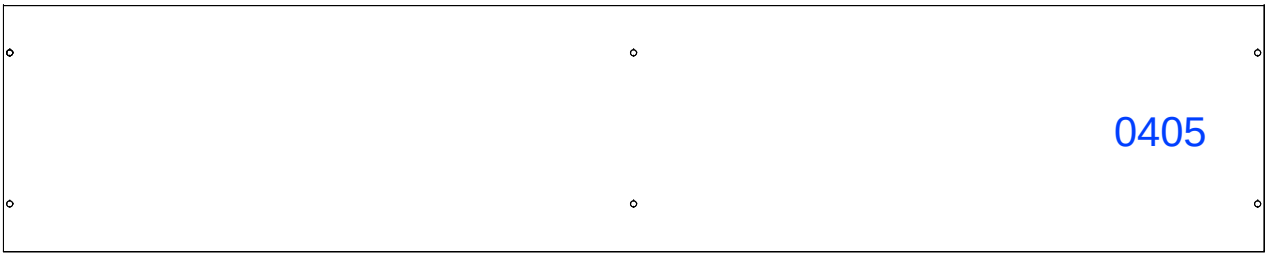

1600*312*16

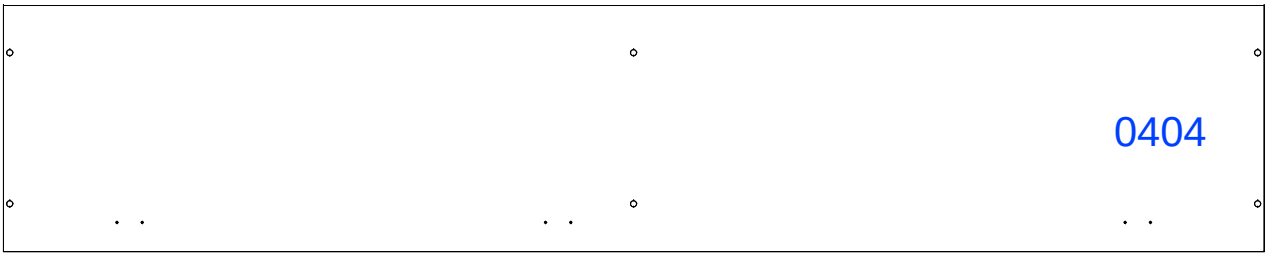

318*312*16

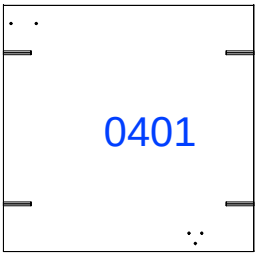

318*312*16

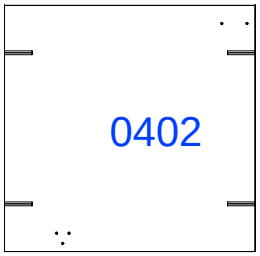

318*311*16

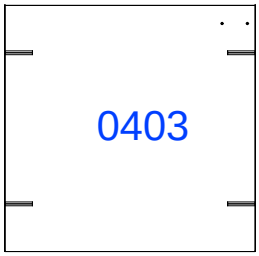

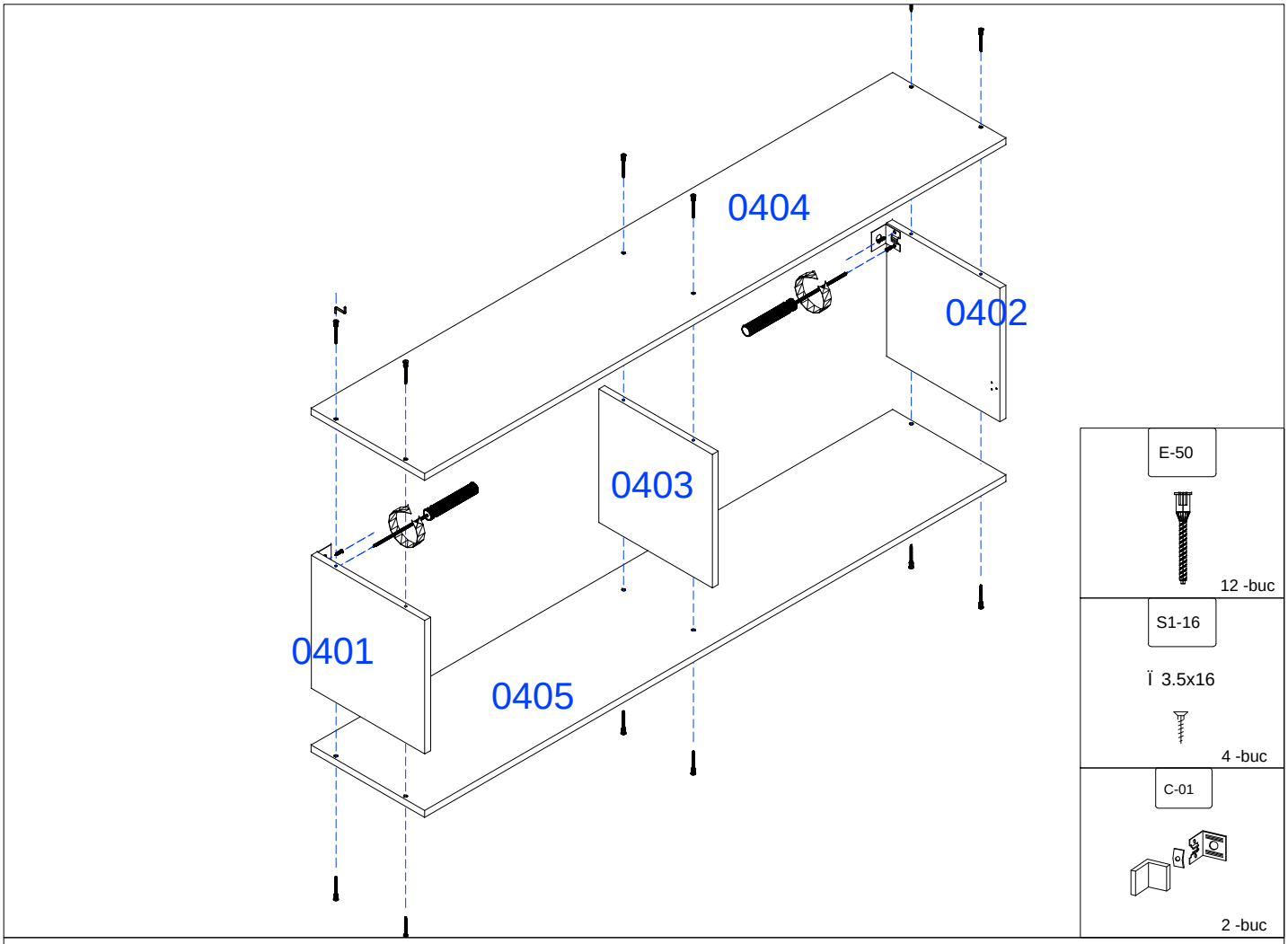
0404
0402
0403
0401
0405
E-50
12 -buc
S1-16
Ï 3.5x16
4 -buc
C-01
2 -buc

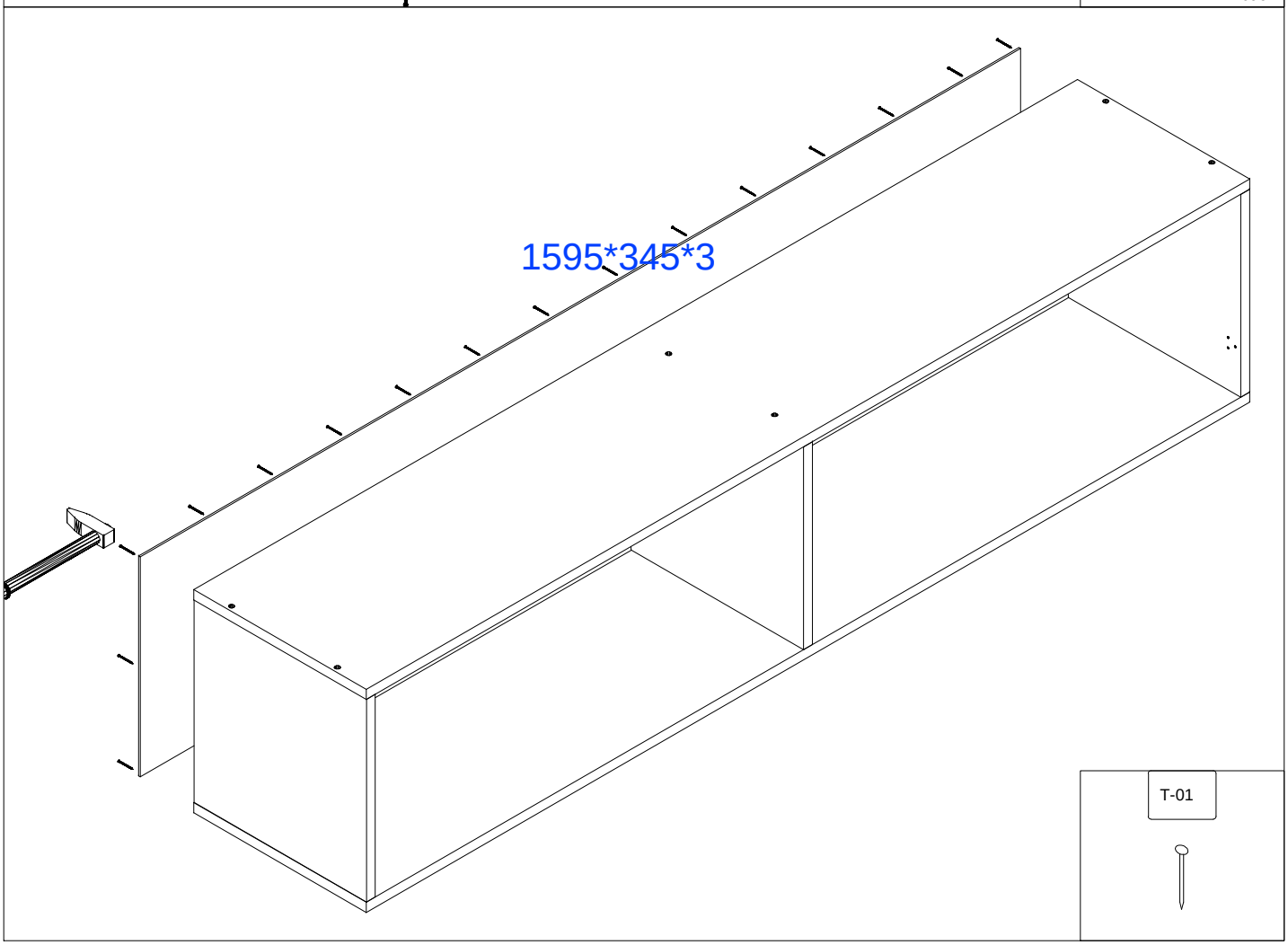
1595*345*3
T-01

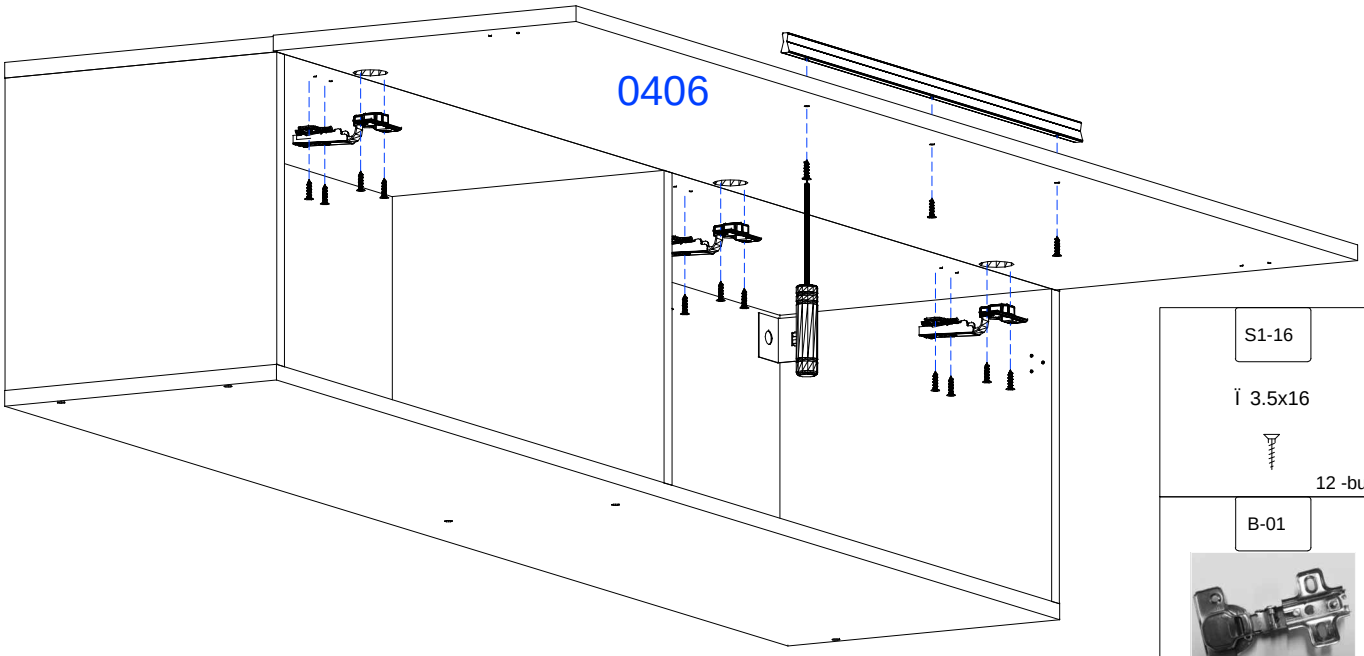

S1-16

Ï 3.5x16

12 -buc

B-01

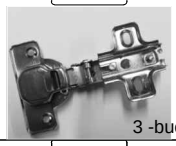

3 -buc

M-03

1 -buc

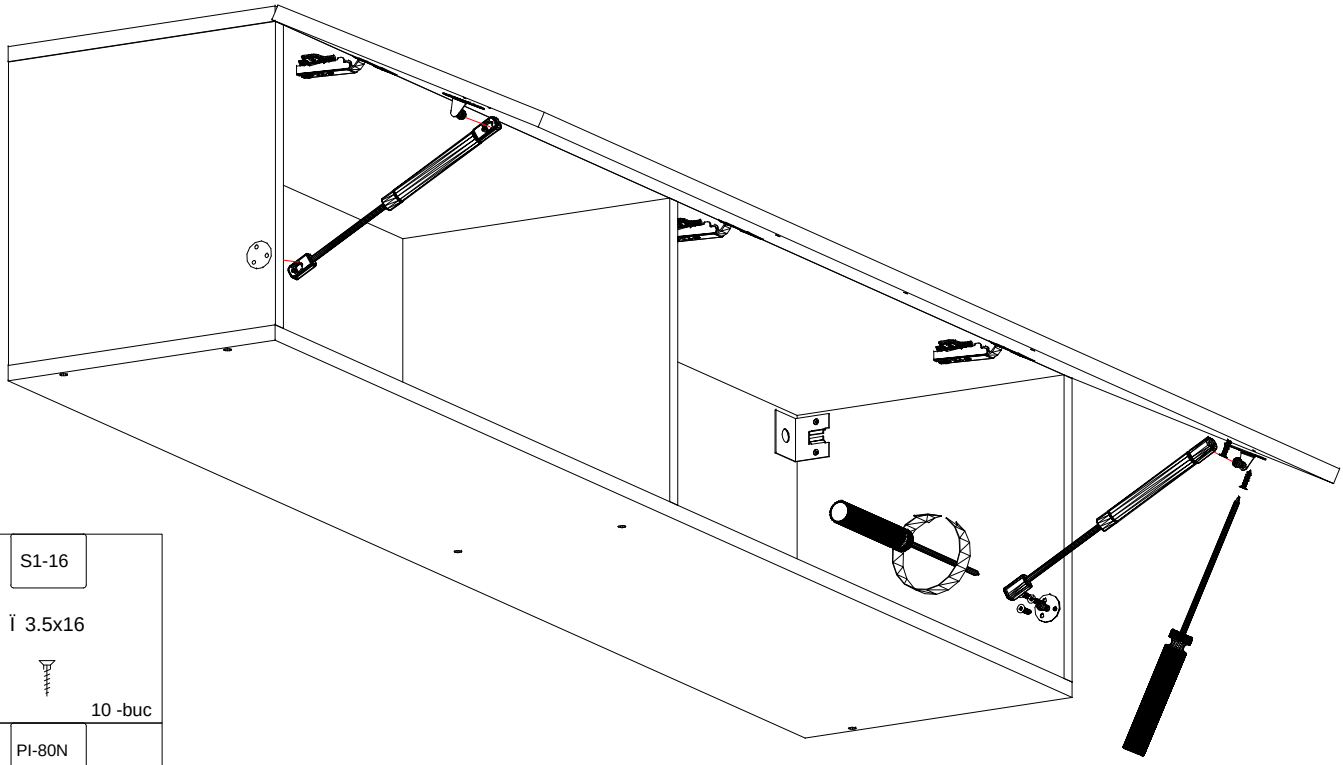

S1-16

Ï 3.5x16

10 -buc

PI-80N

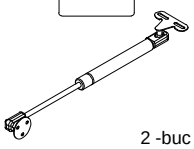

2 -buc

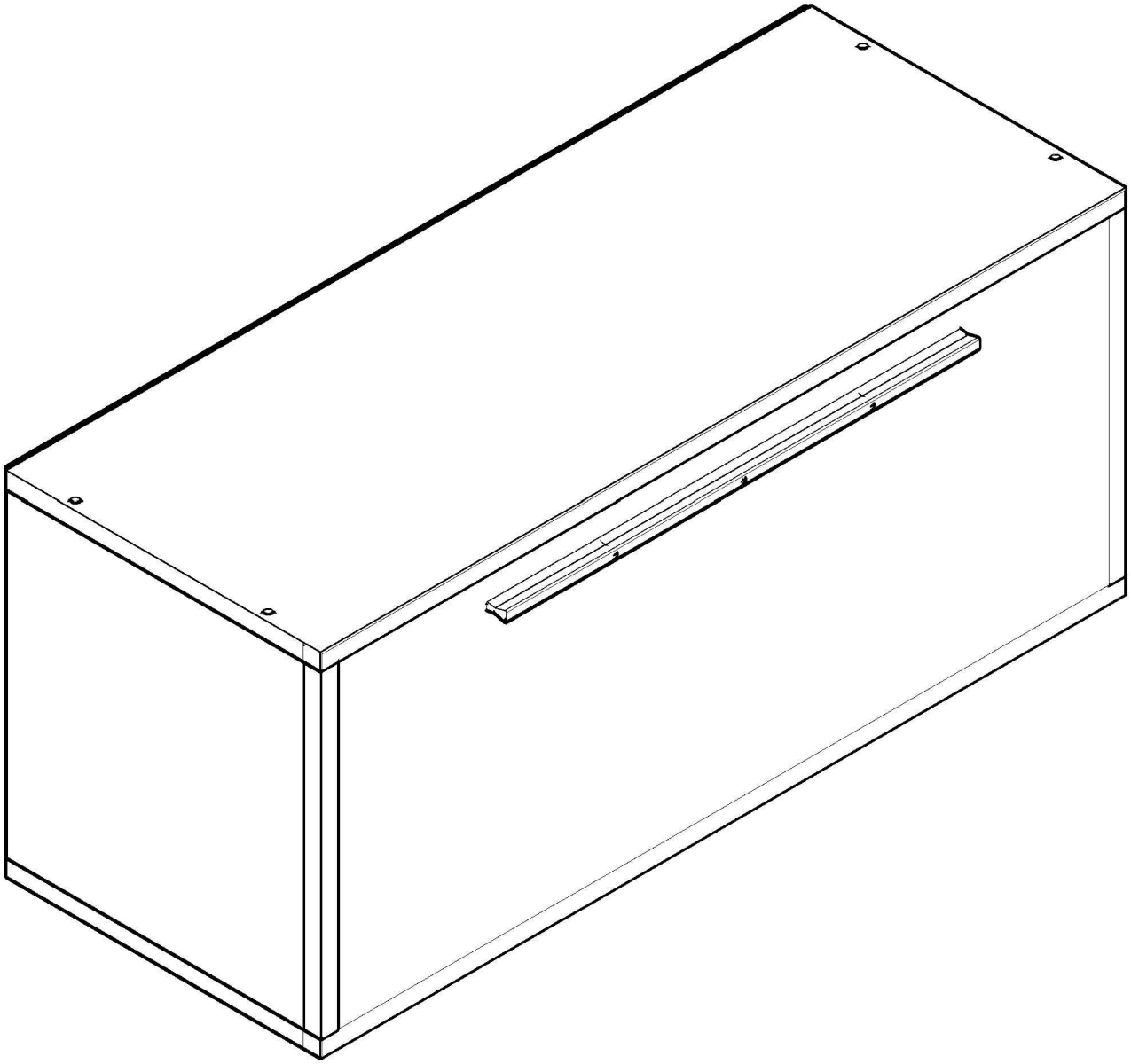

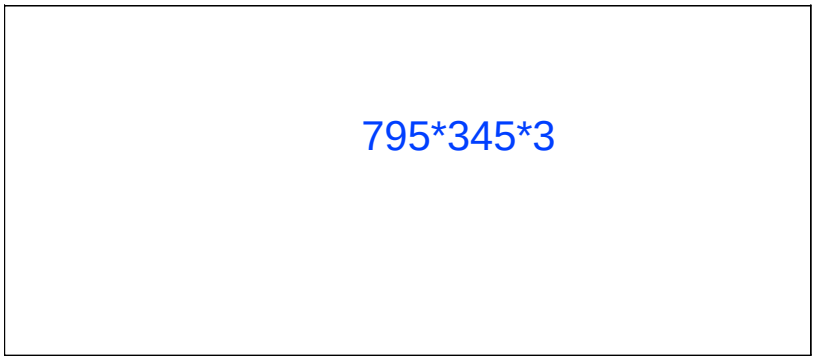

318*312*16

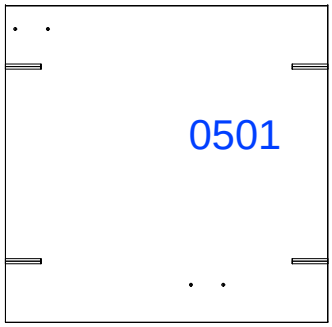

800*349*16

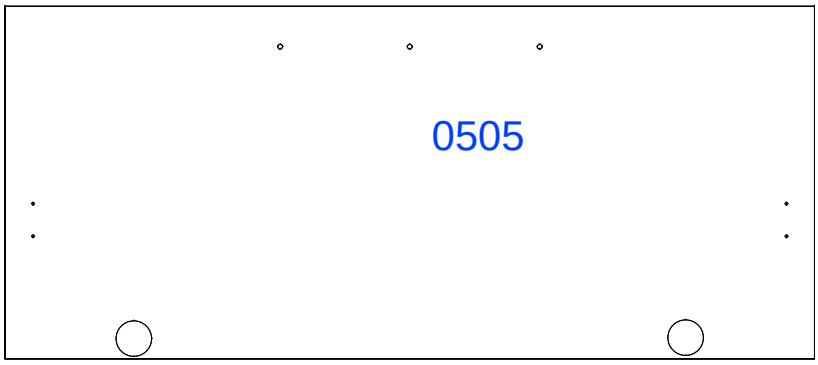

318*312*16

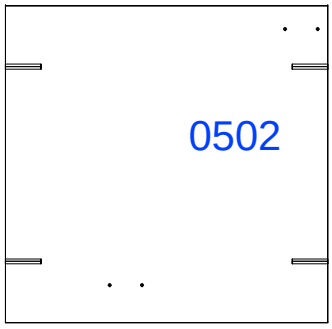

800*312*16

800*312*16

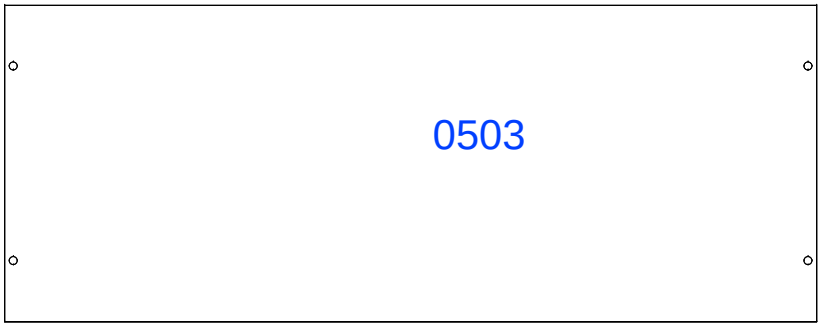

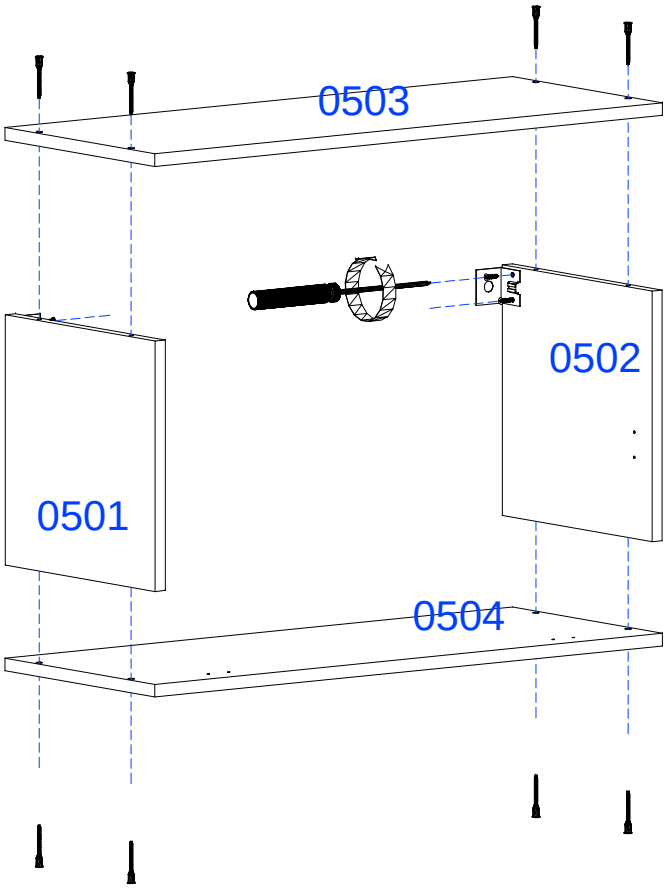
0503
0502
0501
0504

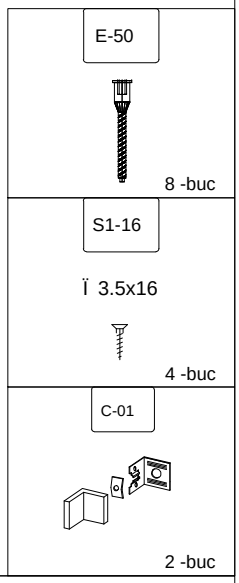
E-50
8 -buc
S1-16
Ï 3.5x16
4 -buc
C-01
2 -buc

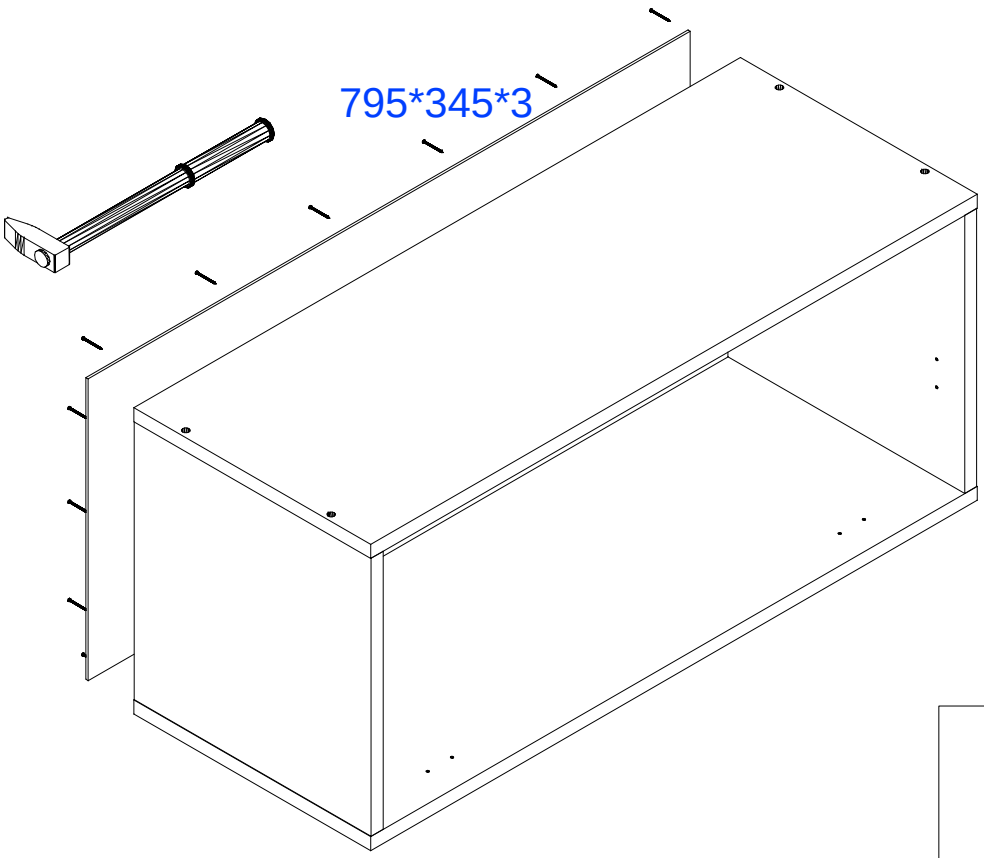
795*345*3

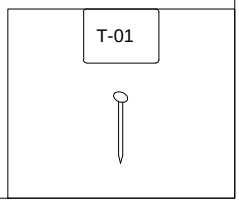
T-01

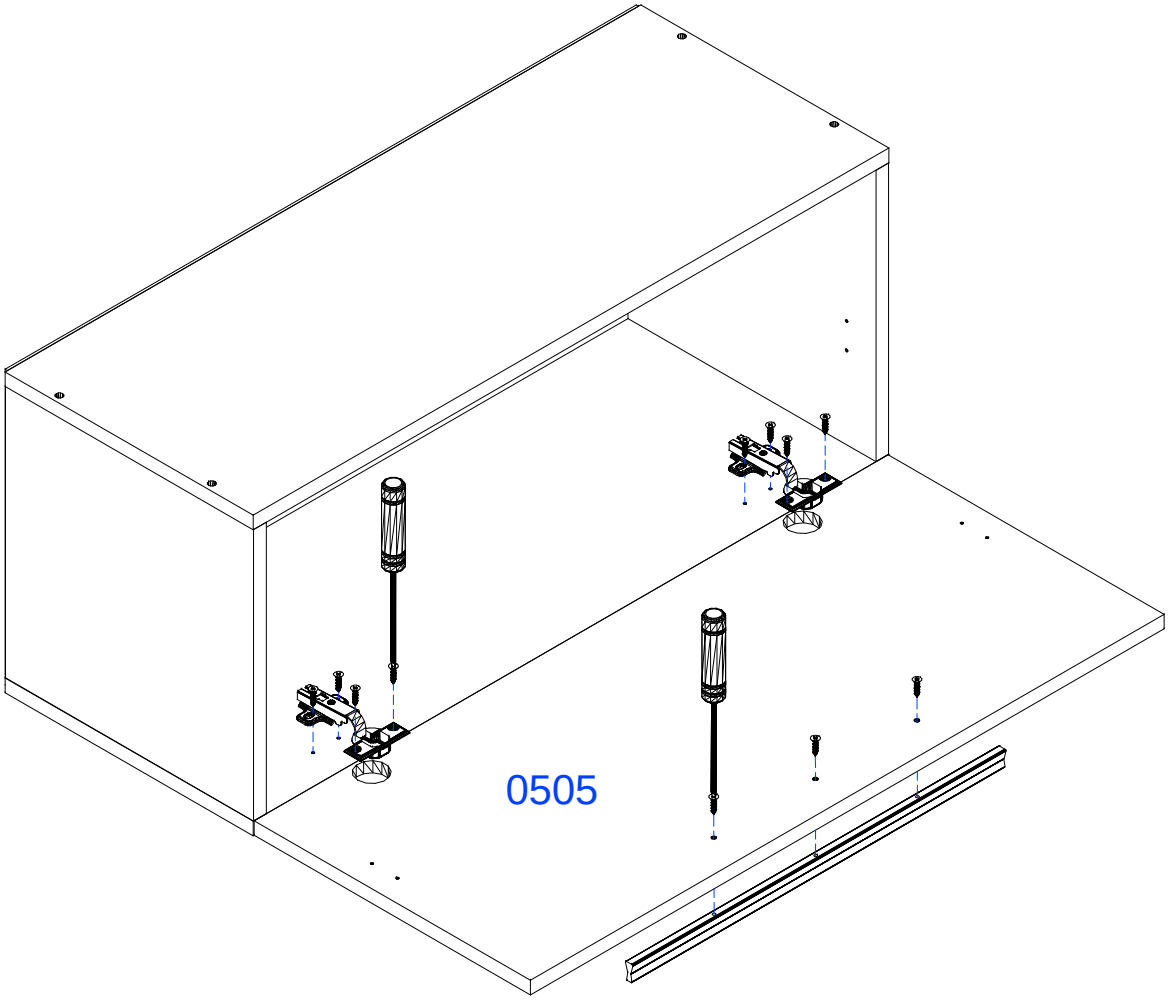

S1-16

Ï 3.5x16

8 -buc

B-01

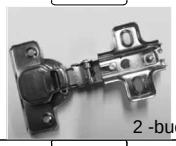

2 -buc

M-03

1 -buc

S1-16

Ï 3.5x16

4 -buc

LAF

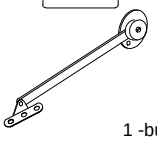

1 -buc

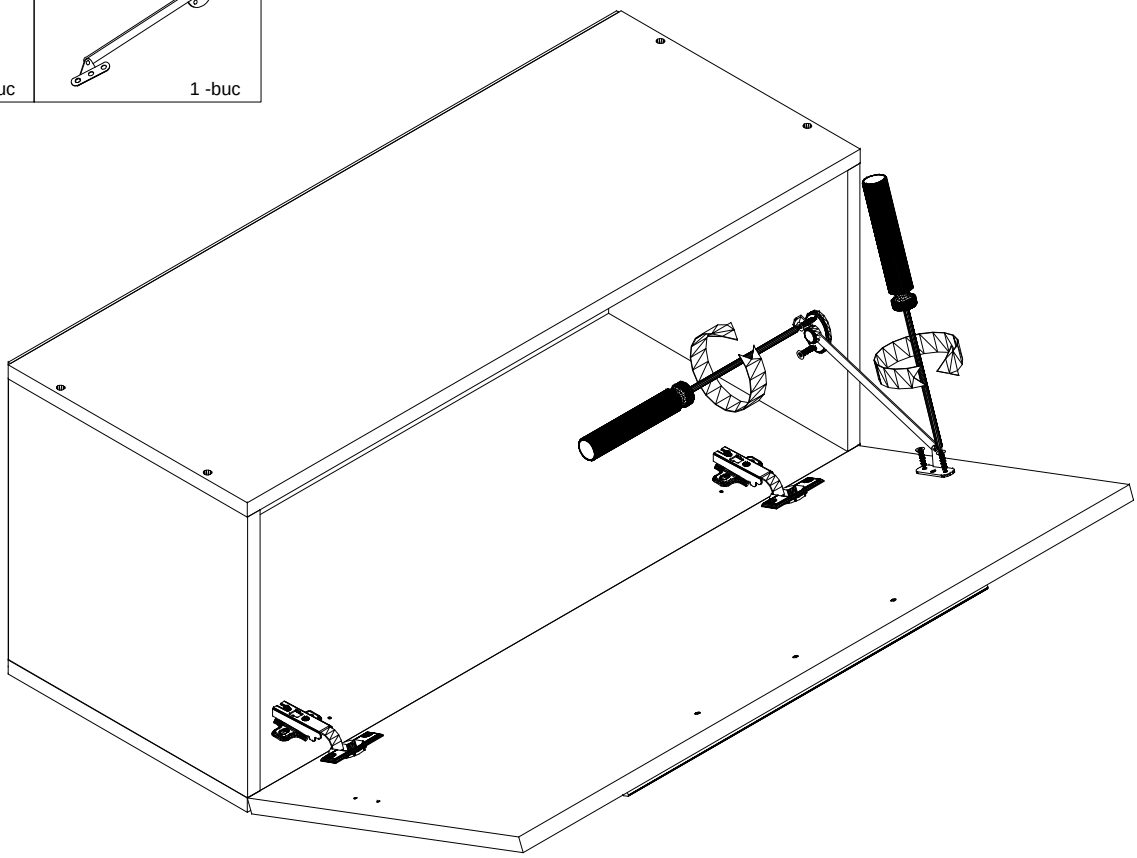

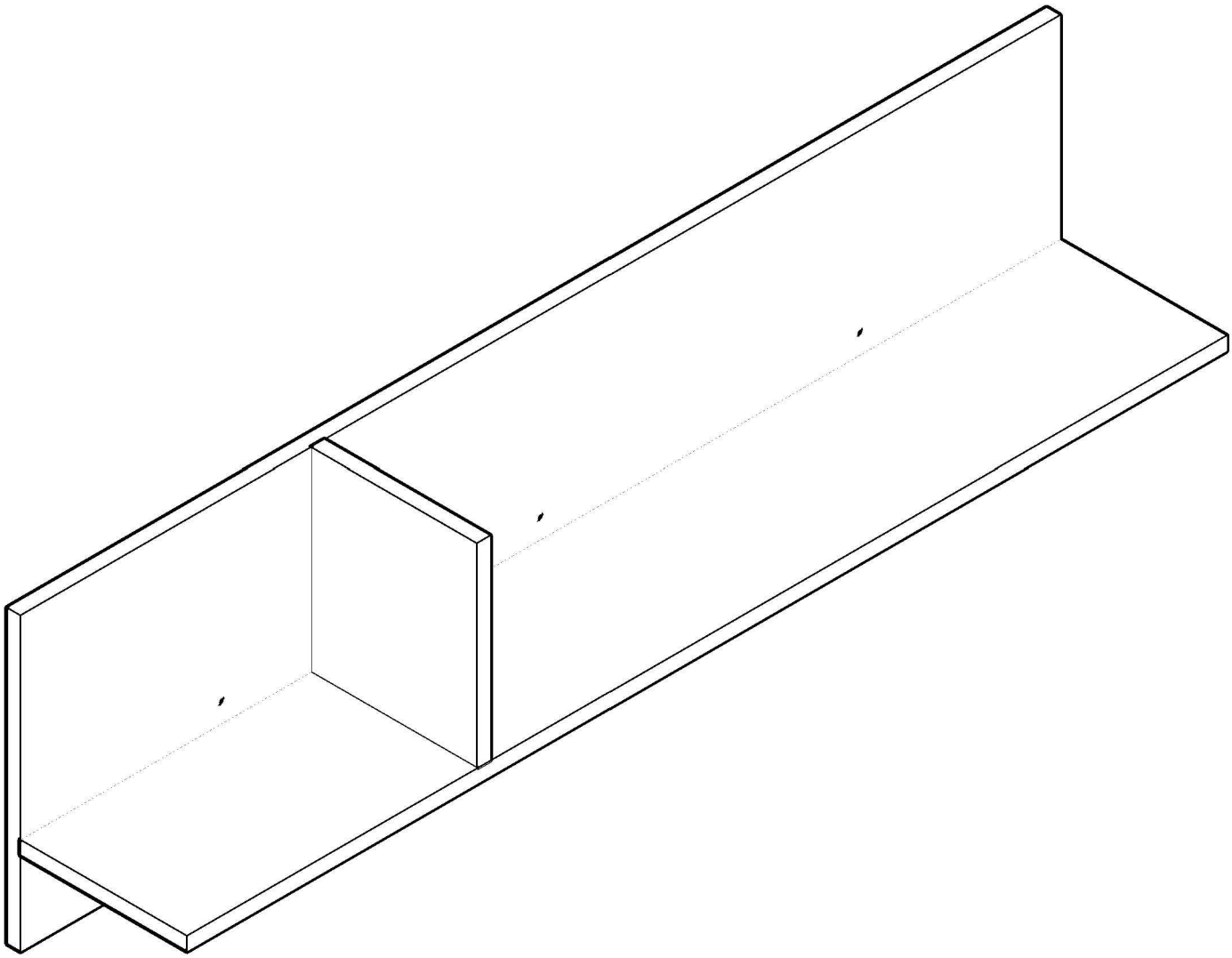

1250*350*16

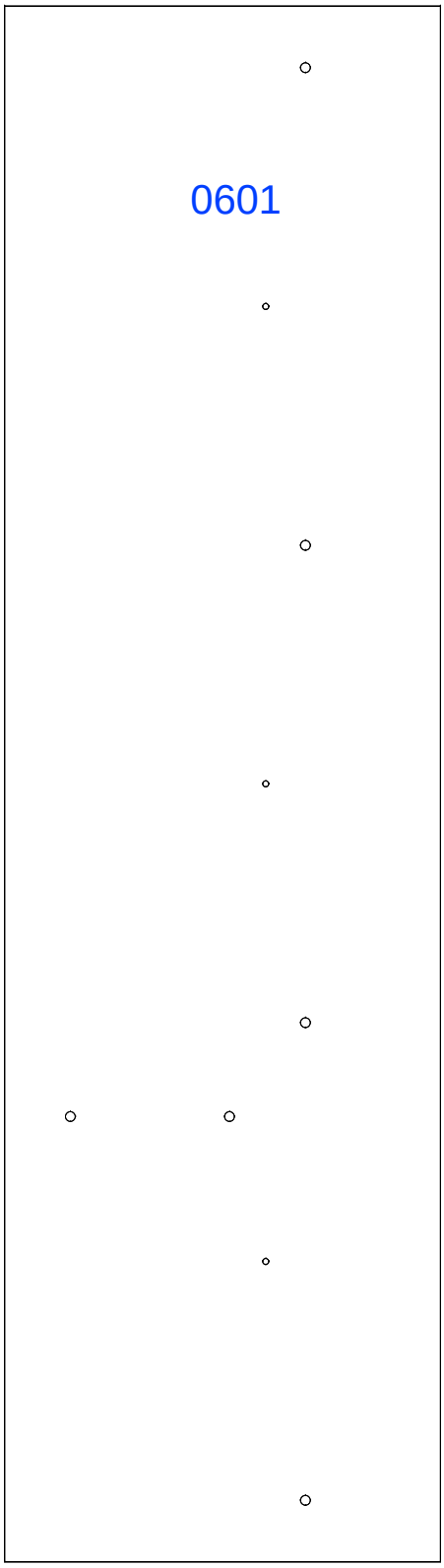

1250*200*16

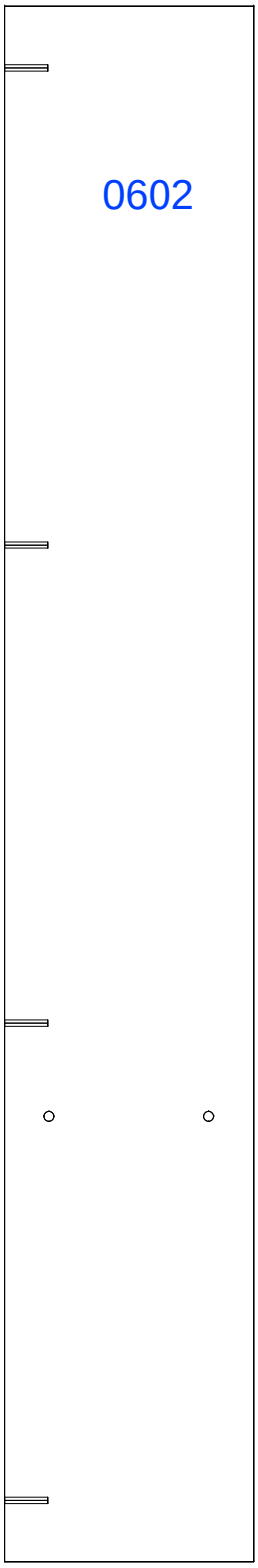

234*200*16

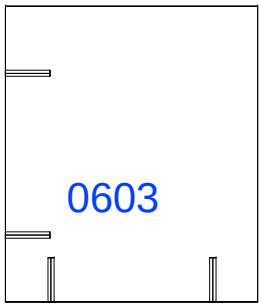

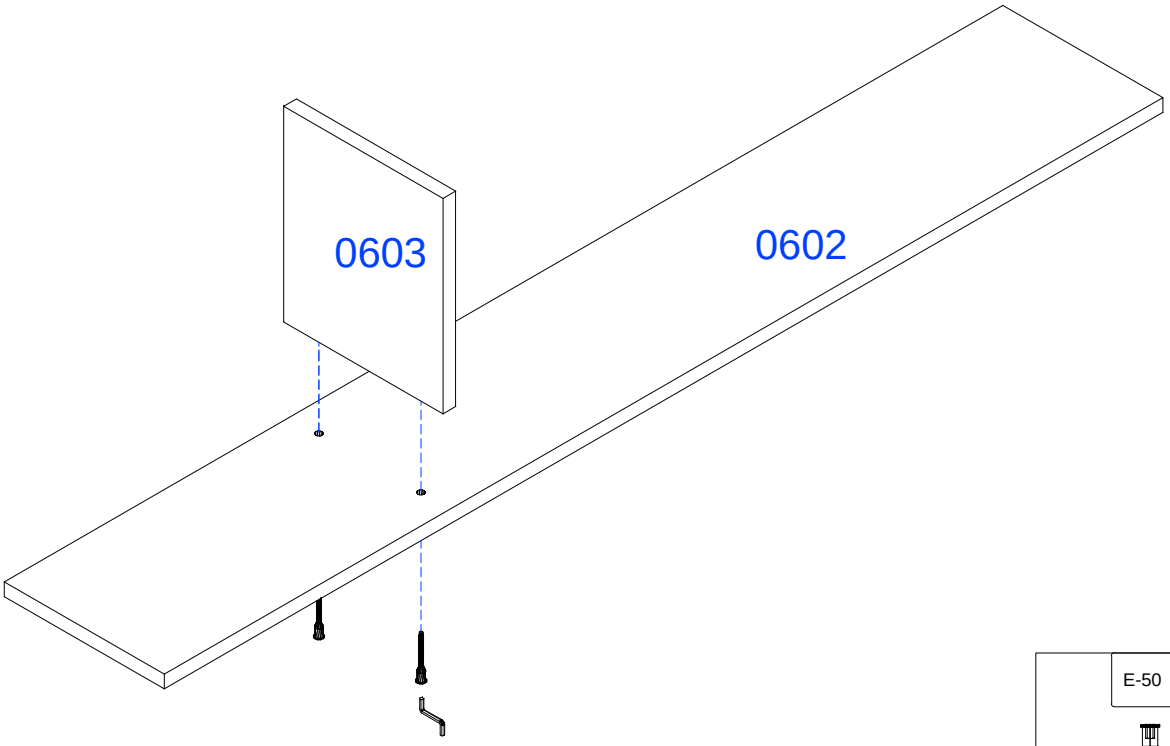
0603
0602

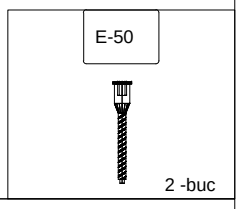
E-50
2 -buc

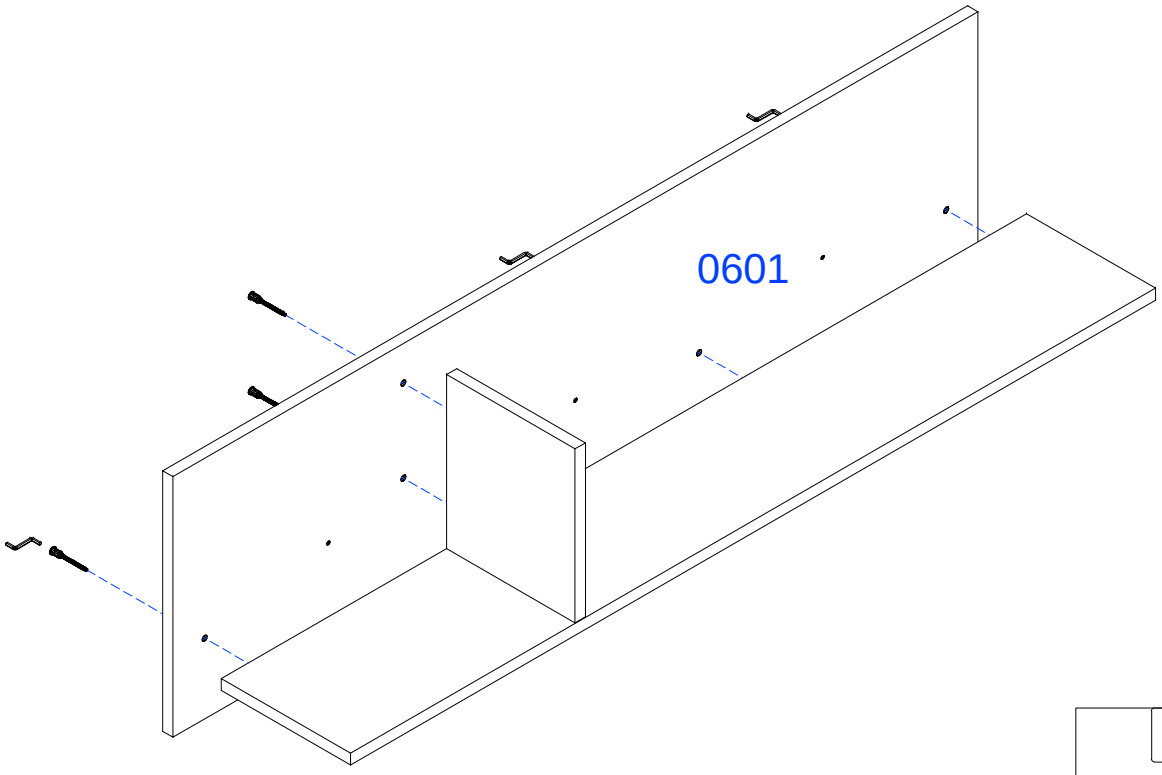
0601

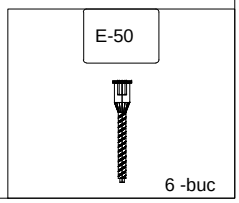
E-50
6 -buc

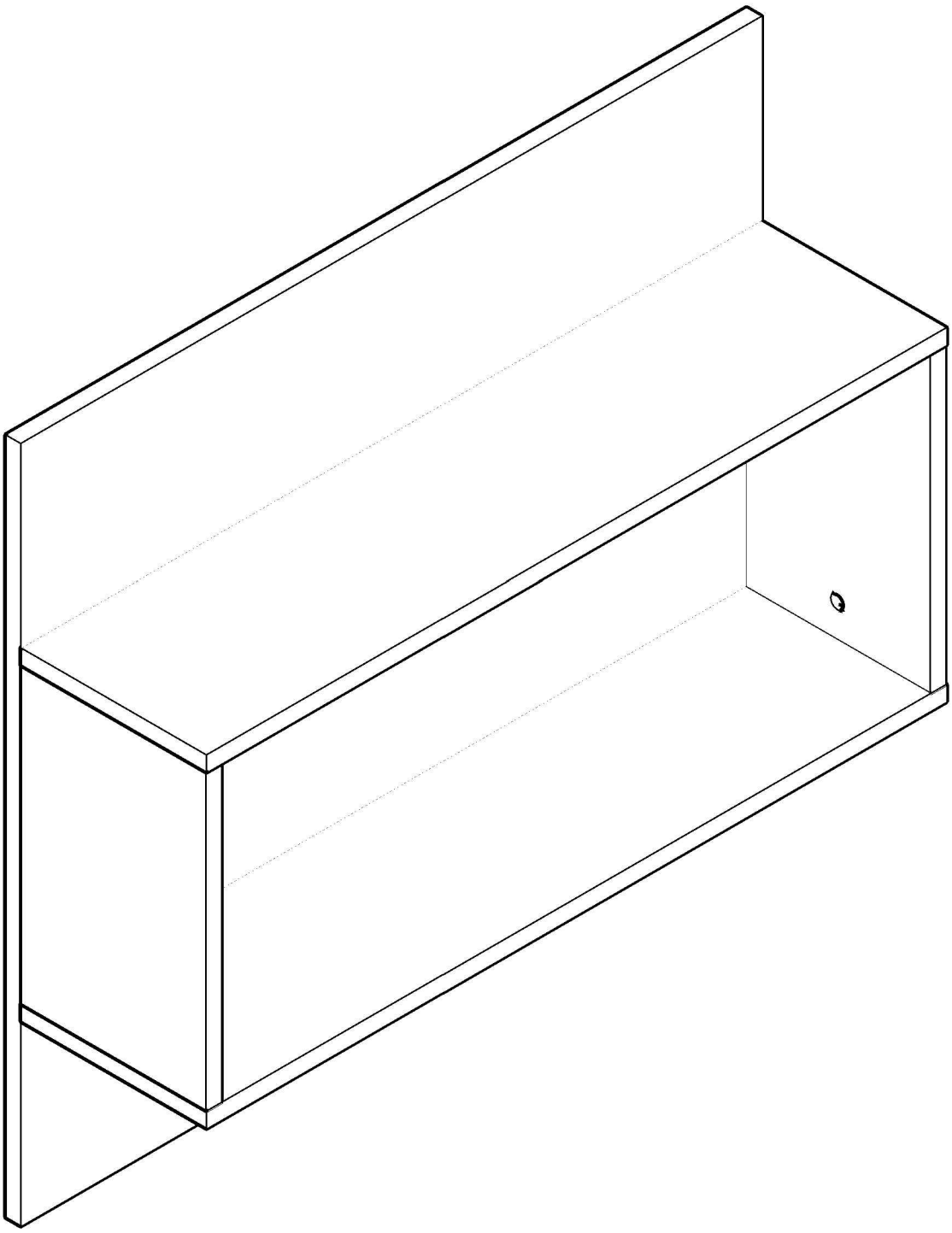

734*802*16

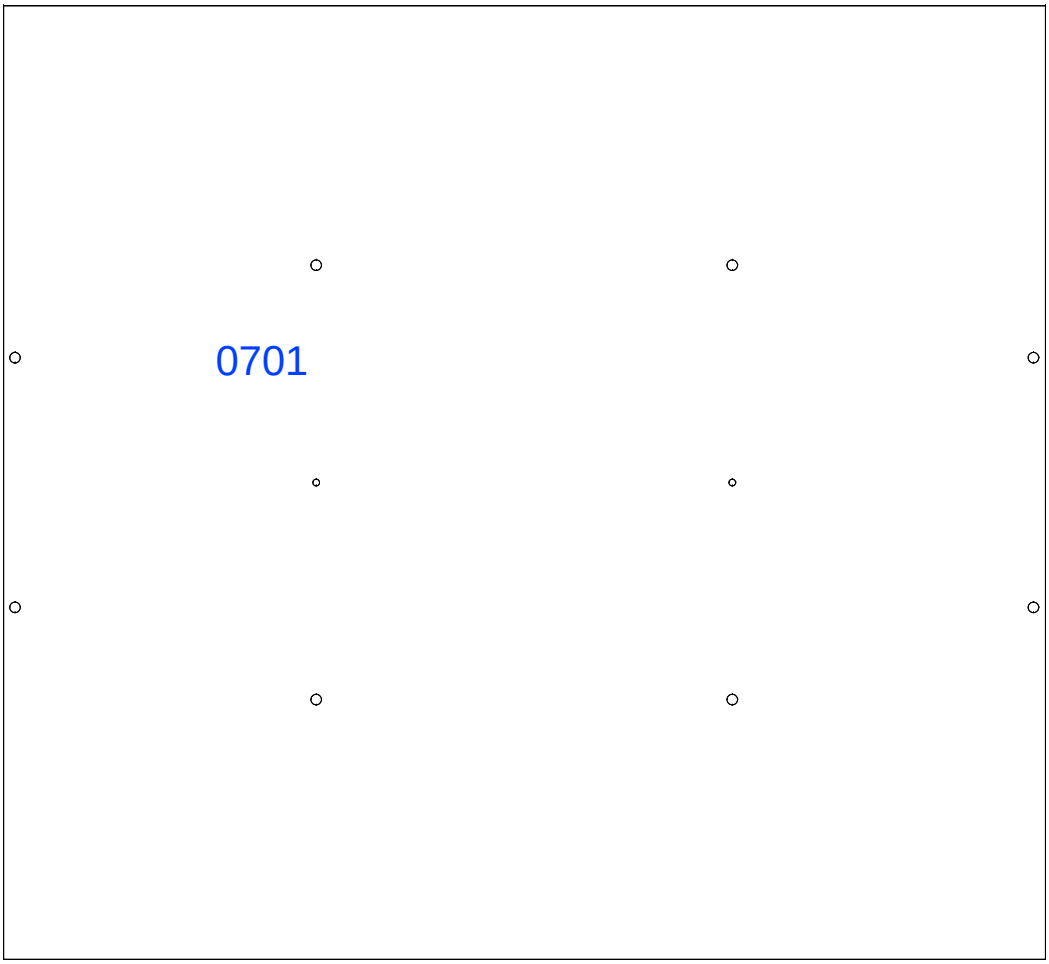

801*202*16

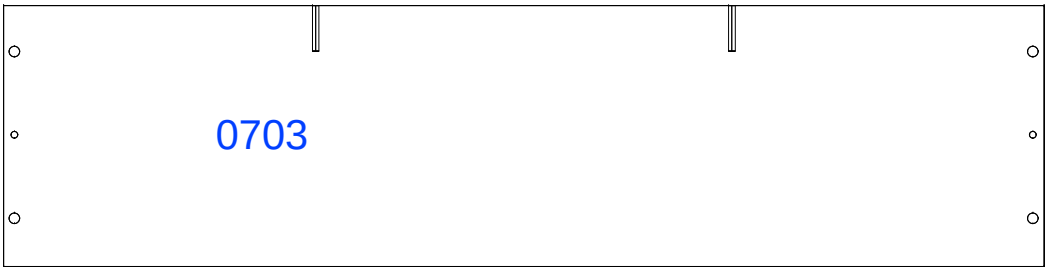

318*200*16

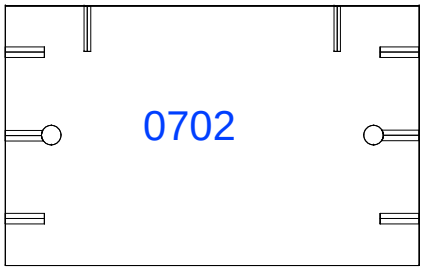

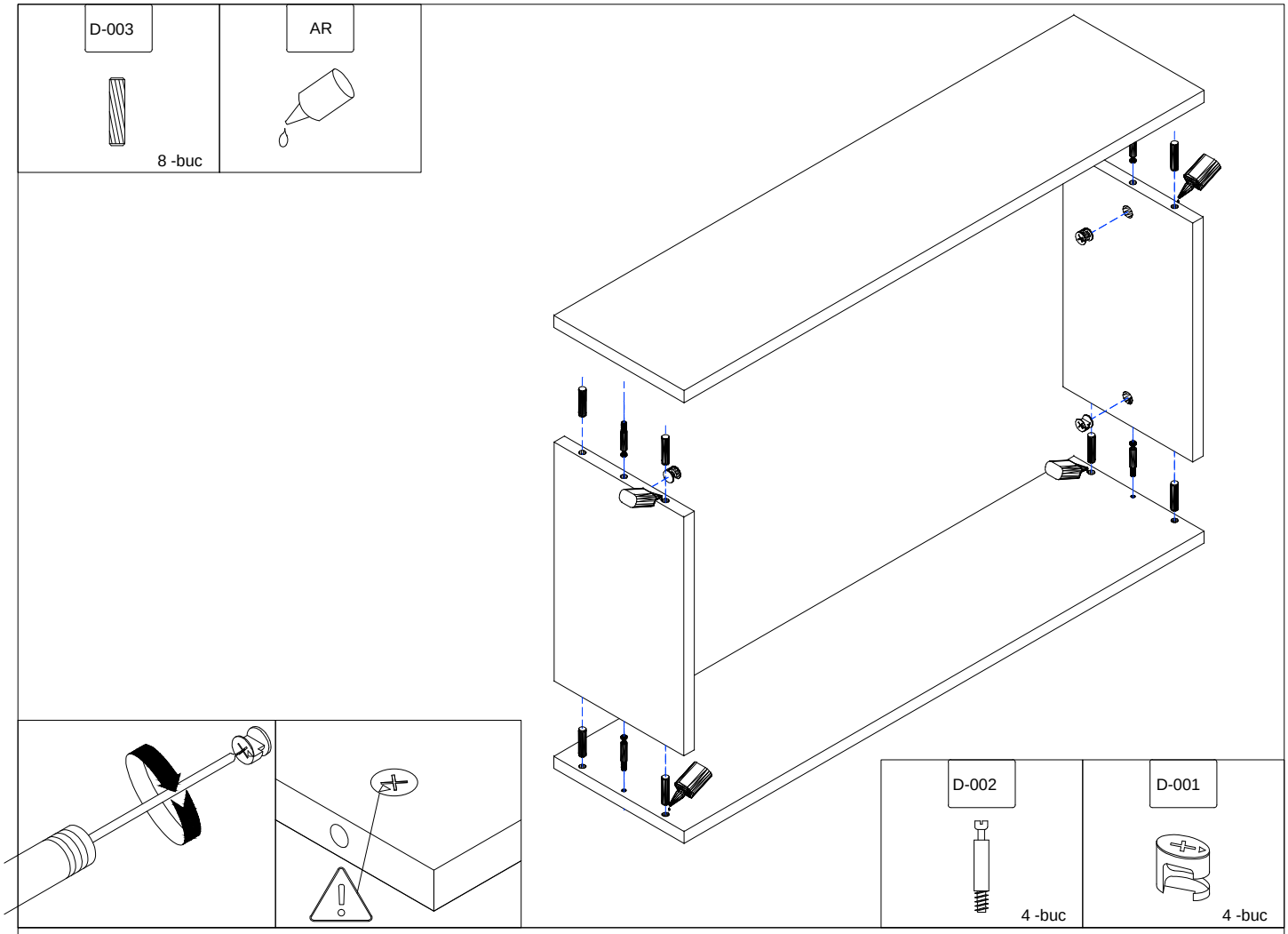
D-003
8 -buc
AR
D-002
4 -buc
D-001
4 -buc

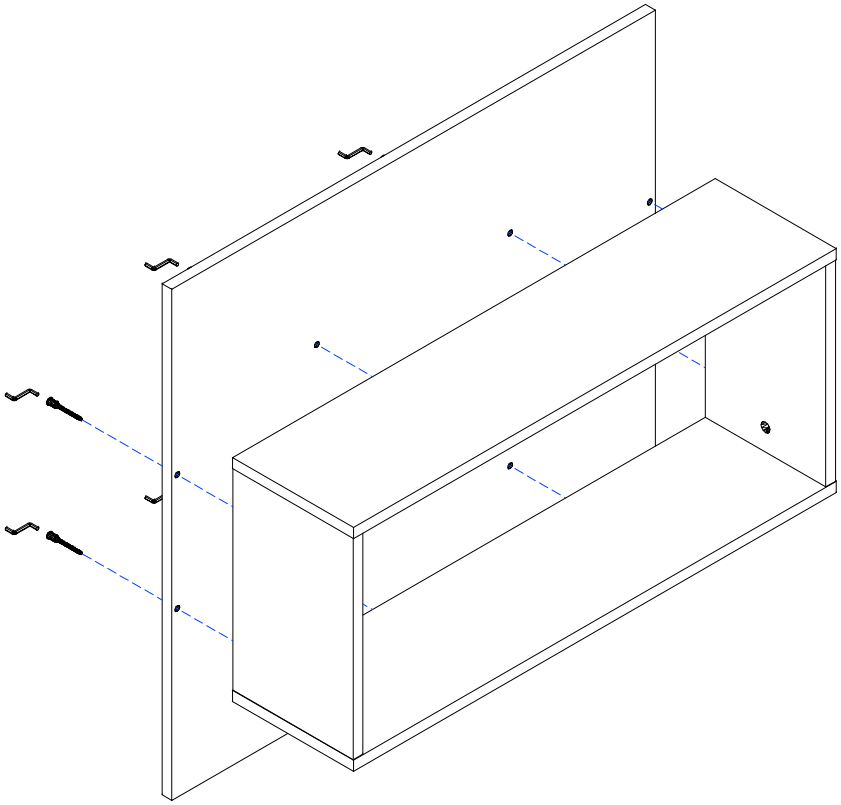
E-50
8 -buc

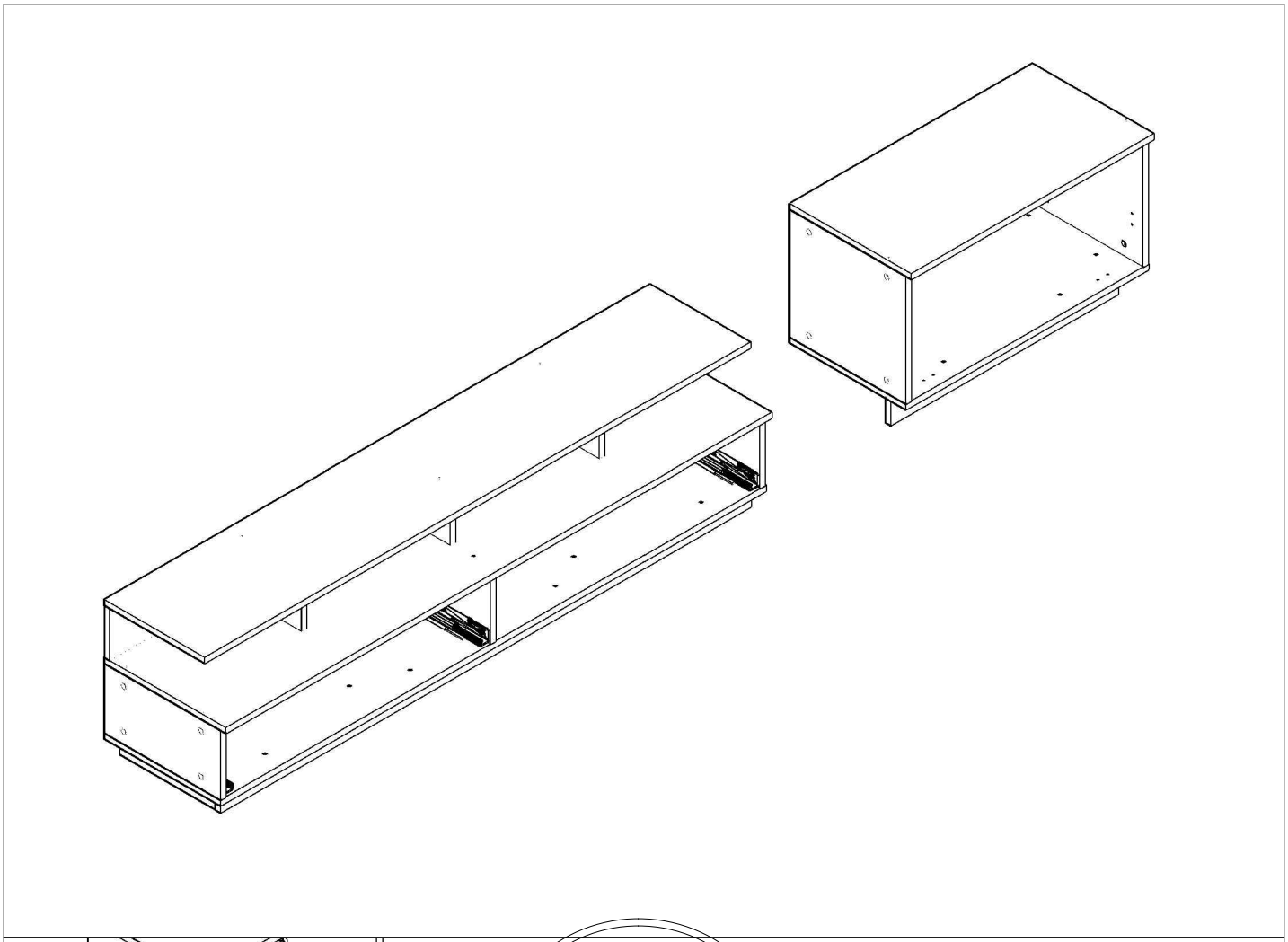

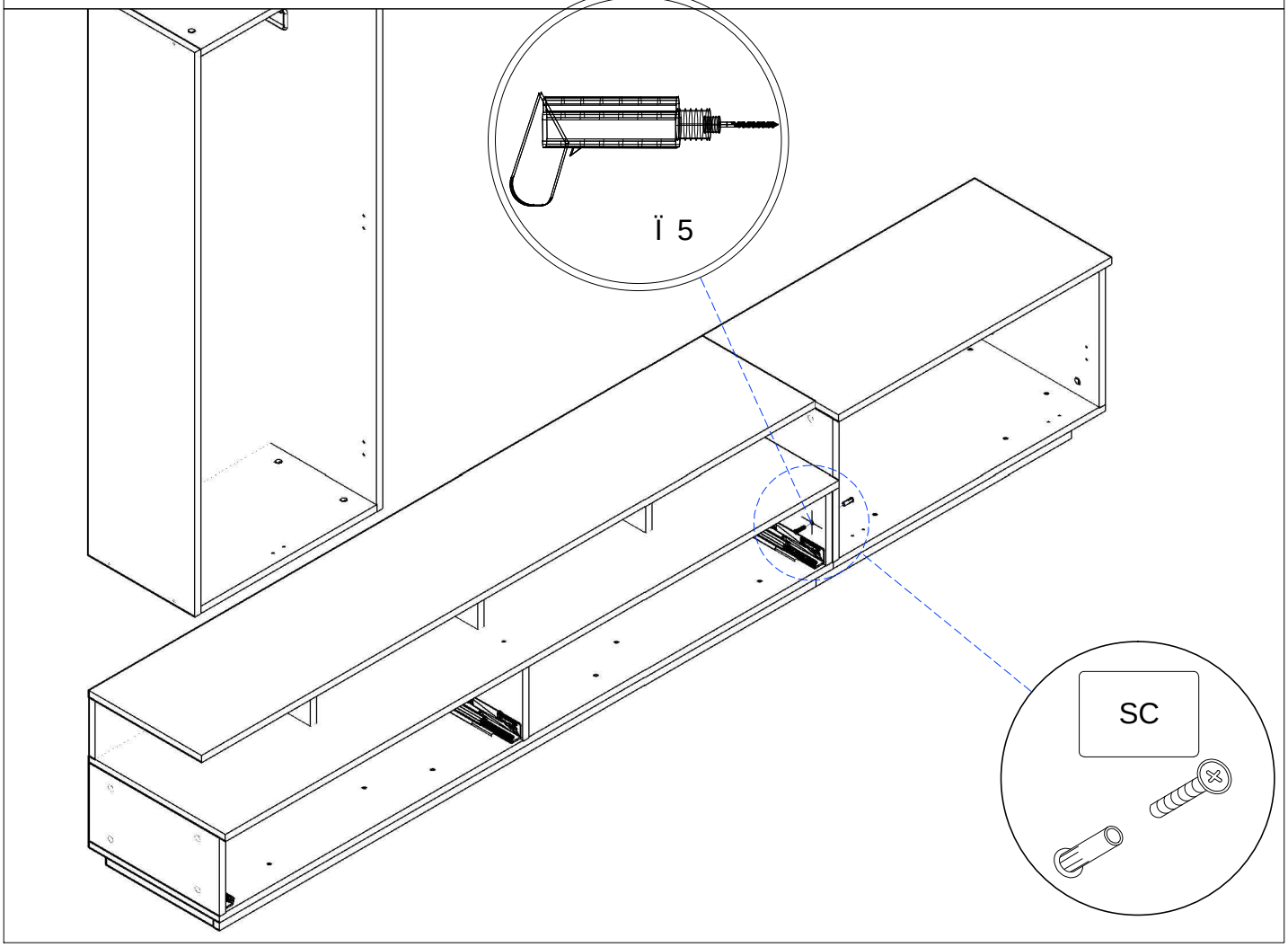
Ï 5
SC

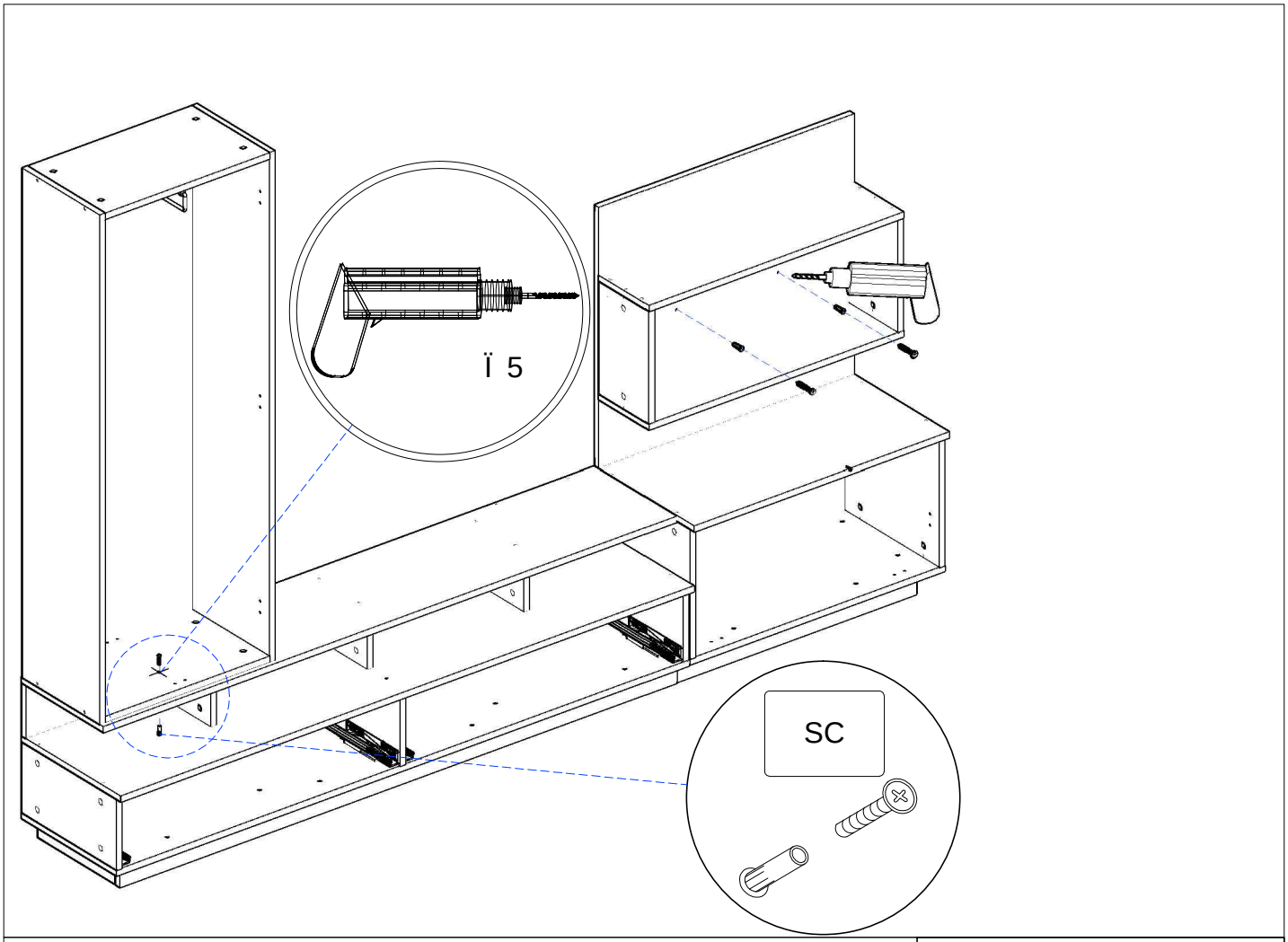
Ï 5
SC

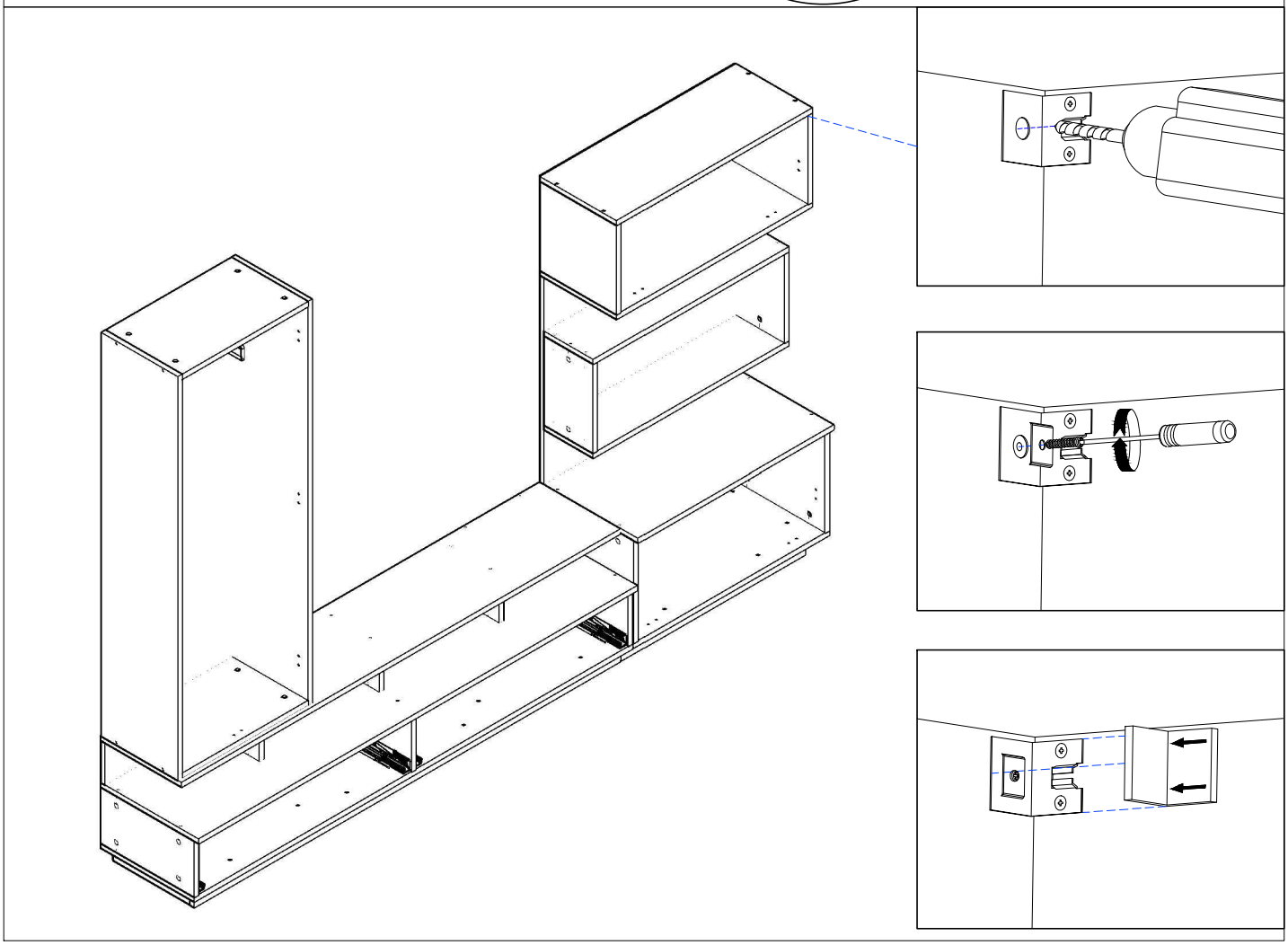

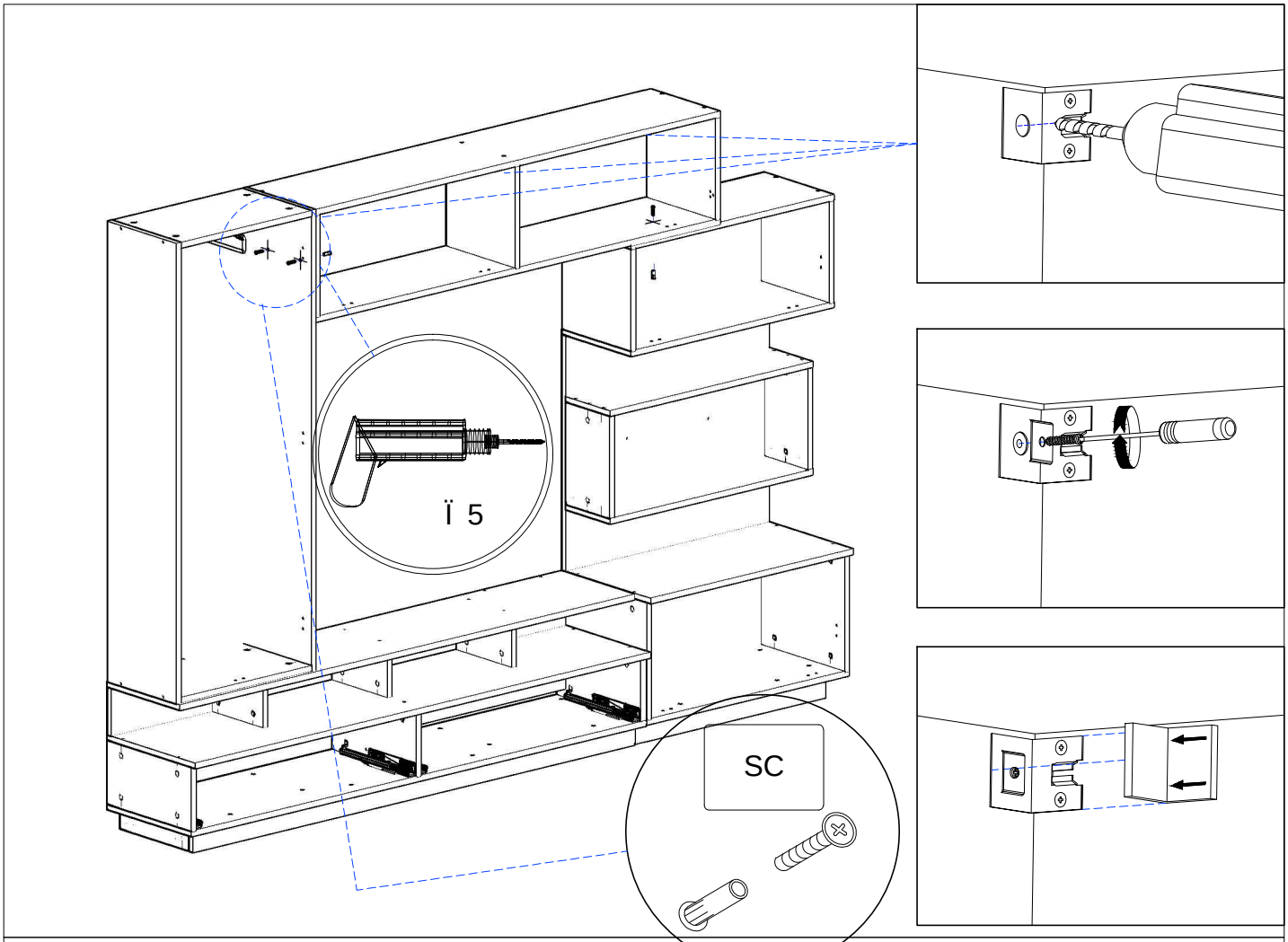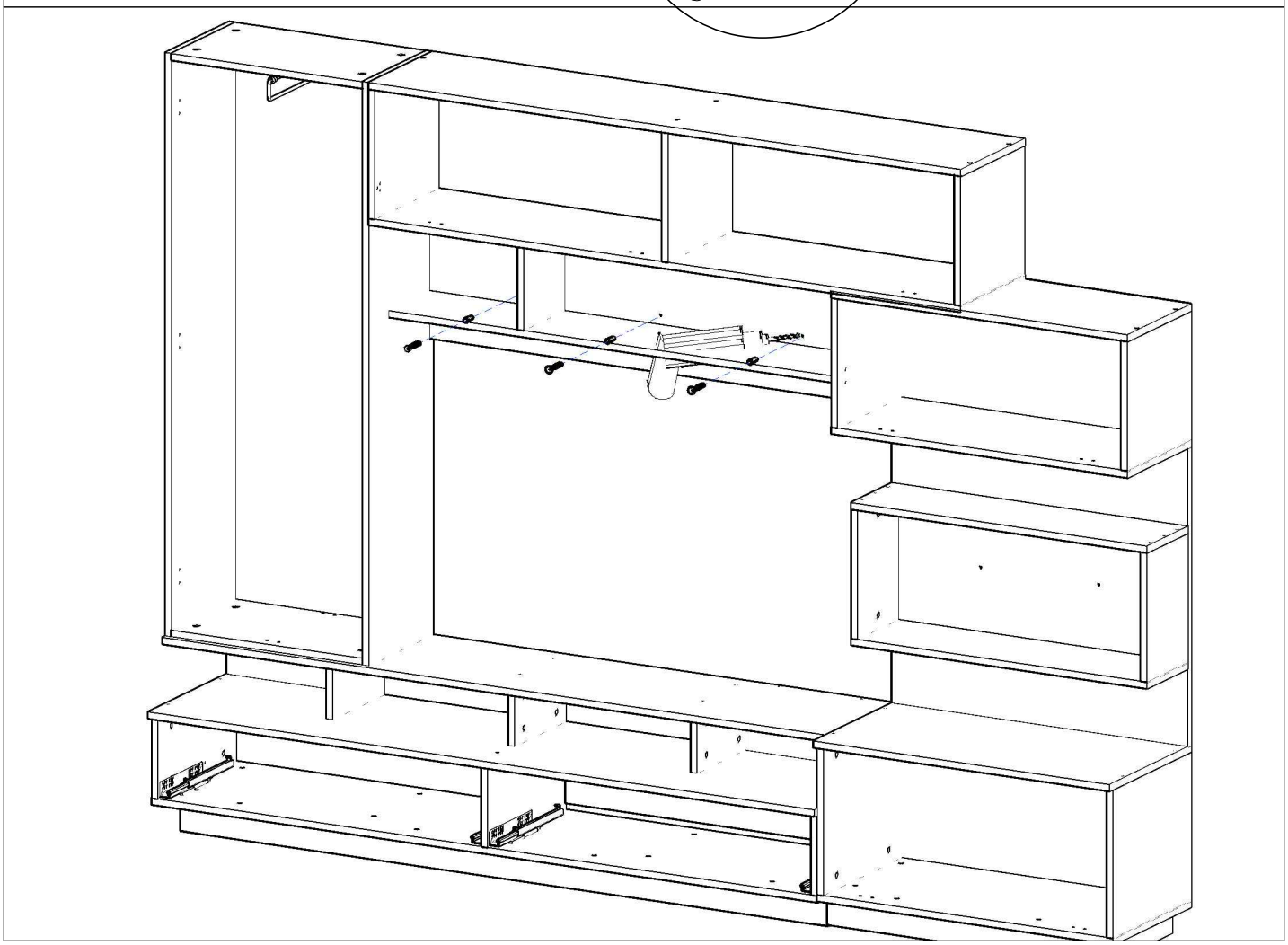
Ï 5
SC