Assembly instructions
Instructiuni de montare

PRODUCT : HORATIU CHEST
PRODUS : HORATIU COMODA

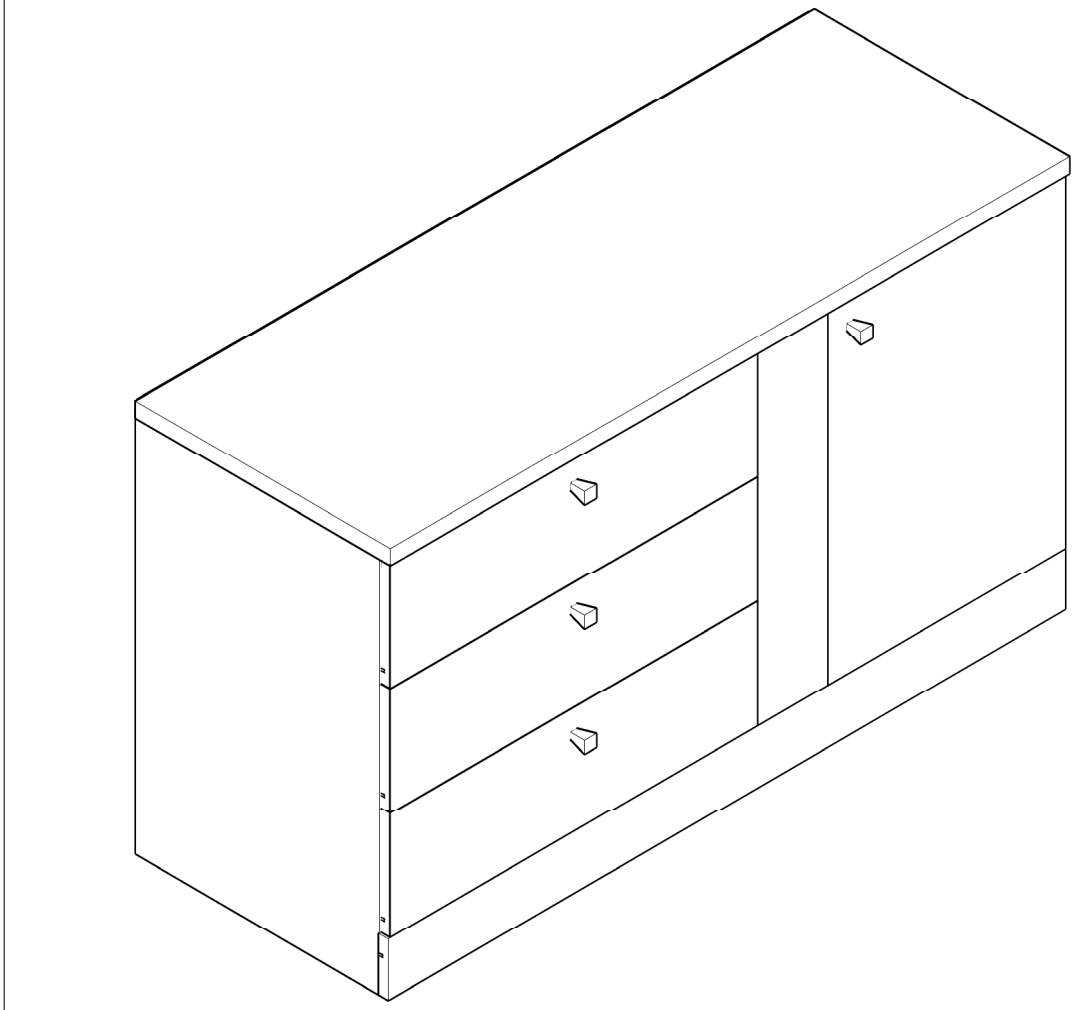

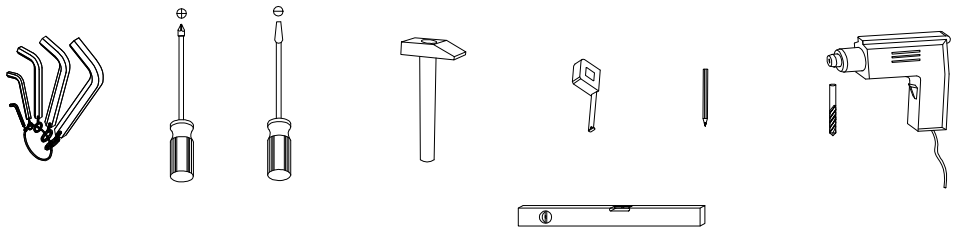

ENG Dear customer,

– As a furniture producer we would like to inform you that a wall fixing furniture can be good only if the connection between fixing material (plugs) and the wall is better. For the suspended items check the wall and use only apropriate type of dowels (brick, BCA, plasterboard,etc.) purchased from a specialty store.
–Assembler is ultimately responsible for a fixed wall.Installation and laying of electrical items will be made only by qualified personnel and
authorized.
– Follow the description and specification of Charge assembly instructions – in case overload that may occur due to children playing, because people, material or due to other factors – we assume no liability as a manufacturer of furniture.
–O perfect functionality of the furniture is assured only if the settlement
this adjusts the horizontal and vertical. Only after that will adjust the doors.
– All screws and removable connection elements will be checked and tightened
after 5 to 6 weeks to ensure safety o final fixation.
– Do not use abrasive cleansers
– If not follow the instructions on the use, maintenance or installation, if the products or changes, if changes or used parts that do not meet original pieces, then lose any warranty or claim
responsibility of the manufacturer of furniture.

Incarcari maxime pentru polite in Kg: Maximum weight in Kg Shelf							
Grosime PAL melaminat Thick chipboard							Sticla Glass
Lungime Length	mm	16	18	22	25	28	5 / 6/ 8
0 ≤ 400		8 kg	8 kg	8 kg	10 kg	10 kg	Lungime Length >600=5Kg.
401 ≤ 600		6 kg	6 kg	6 kg	6 kg	6 kg	
601 ≤ 800		5 kg	5 kg	5 kg	5 kg	5 kg	Lungime Length >1000=2Kg.
801 ≤ 1000		3 kg	3 kg	3 kg	3 kg	3 kg	

RO Stimate client,

In calitate de producator de mobila am dori sa va informam ca o fixare a mobilei de perete poate fi buna doar daca legatura dintre materialul de fixare (dibluri) si perete este buna. In cazul corpurilor suspendate verificati peretele si folositi doar dibluri corspunzatoare tipului de perete (caramida, BCA, rigips,etc.) achizitionate dintr–un magazin de specialitate. In definitiv montatorul este raspunzator de fixarea de perete.
– Montarea si pozarea articolelor electrice se va efectua doar de catre personal calificat si autorizat.
– Respectati descrierea si specificatiile de incarcare din instructiunile de montaj – in caz de supraincarcare ce poate sa apara datorita copiilor care se joaca, datorita persoanelor, materialului sau datorita altor factori – nu ne asumam nici o raspundere ca producator de mobila.
– O functionalitate perfecta a mobilei este asigurata doar in cazul in care la asezare, aceasta se regleaza pe orizontala si verticala. Doar dupa aceasta se vor regla usile.
– Toate suruburile si elementele de imbinare demontabila vor trebui verificate si stranse dupa 5 pana la 6 saptamani pentru a se asigura o siguranta definitiva a fixarii.
– Nu folositi agenti de curatire abrazivi
– In cazul in care nu se respecta instructiunile de utilizare, de deservire sau de montaj, daca se efectueaza modificari ale produselor, daca se schimba piese sau se folosesc piese care nu corespund pieselor originale, atunci se pierde orice garantie sau pretentie de responsabilitate din partea producatorului de mobila.

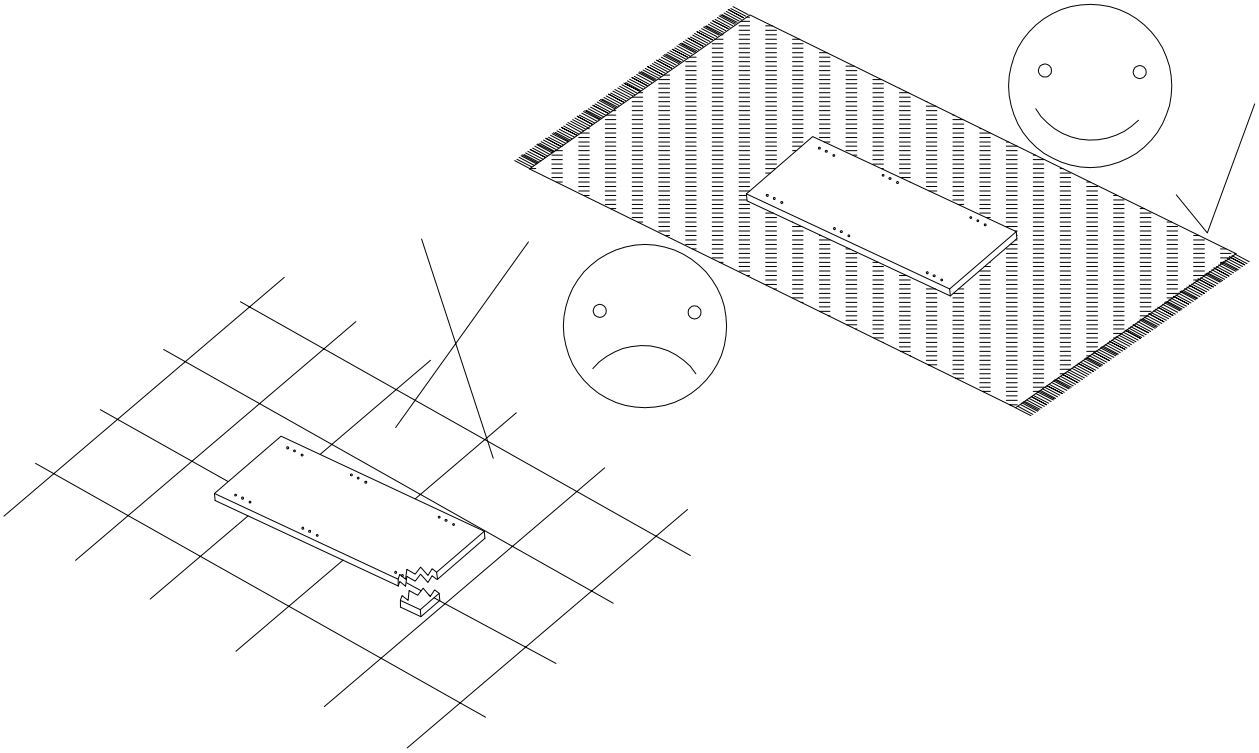

S1-16 ø3.5x16 	**PI-01** 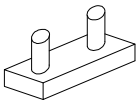	**H** 	**C-03** 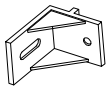
B-01 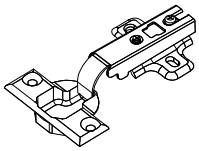	**DRW-400** 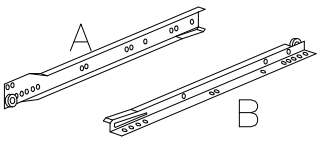	**M-03** 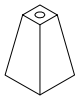	**D-001**
AR 	**T-01** 	**D-004** 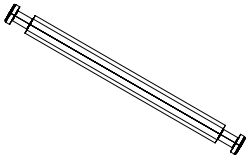	**D-002**
HEX 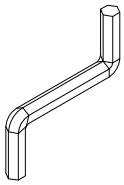	**S-001** 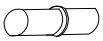	**E-50** 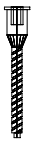	**D-003**

Caracteristici tehnice produs

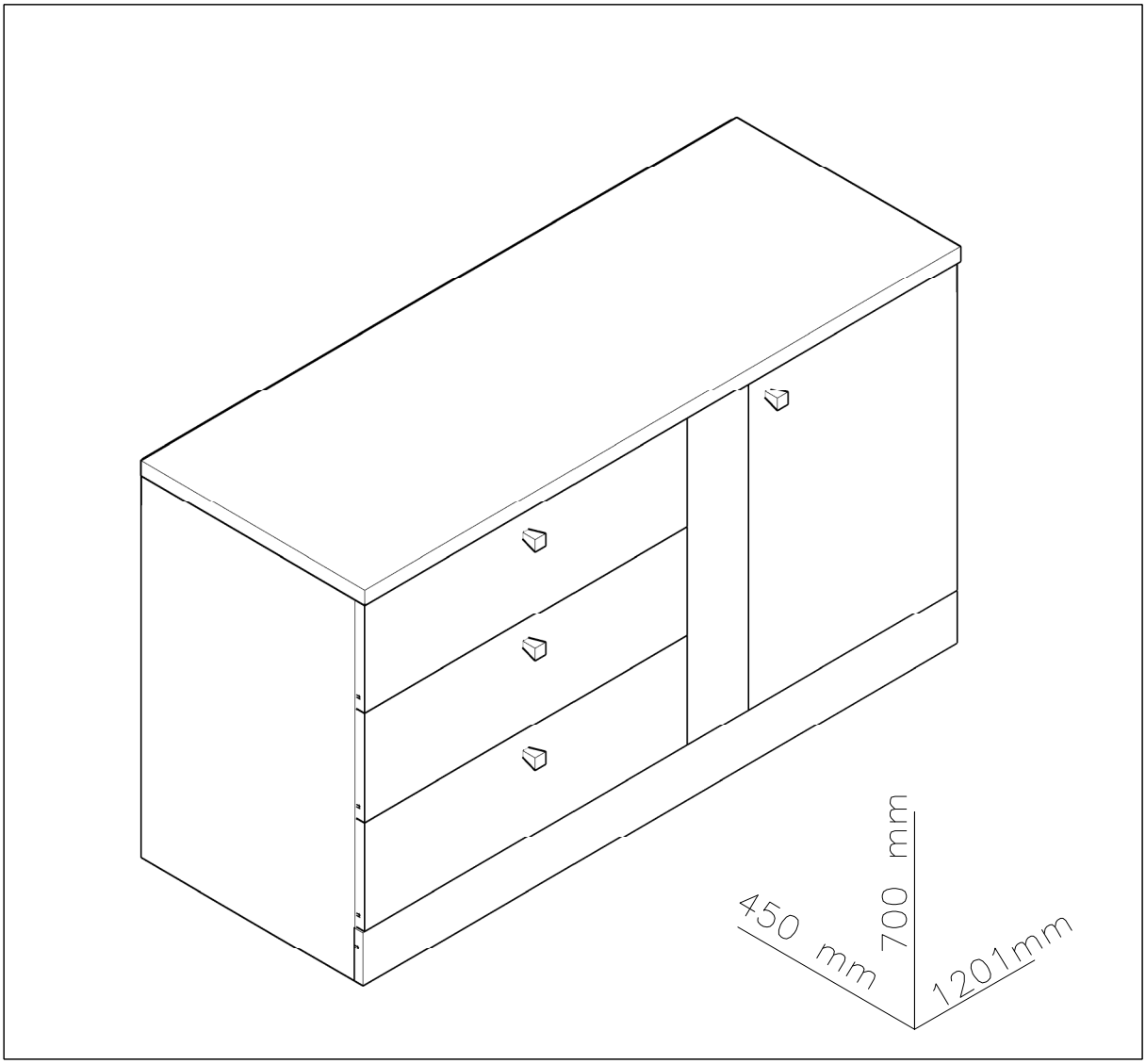

Materiale:
- Placi din aschii de lemn (PAL), meleminate de grosime = 16 mm
- Placi din fibre de lemn de inalta densitate (HDF) de grosime = 3 mm
- Cant ABS 0.5 mm & 1mm
- Elemente de imbinare din lemn si metalice
- Manere plastic
- Glisiere metalice
- Balamale aruncatoare metalice

1201*450*25

0101

573*421*16

0111

670*430*16

0104

670*430*16

0105

520*430*16

0107

670*430*16

0106

0106

400*120*16x6

0108

514*430*16

0103

637*430*16

0102

579*120*16x3

0109

649*189*16x3

0112

1197*93*16

0113

574*122*16

0110

616*265*3x2

616*327*3 x2

656*405*3x3

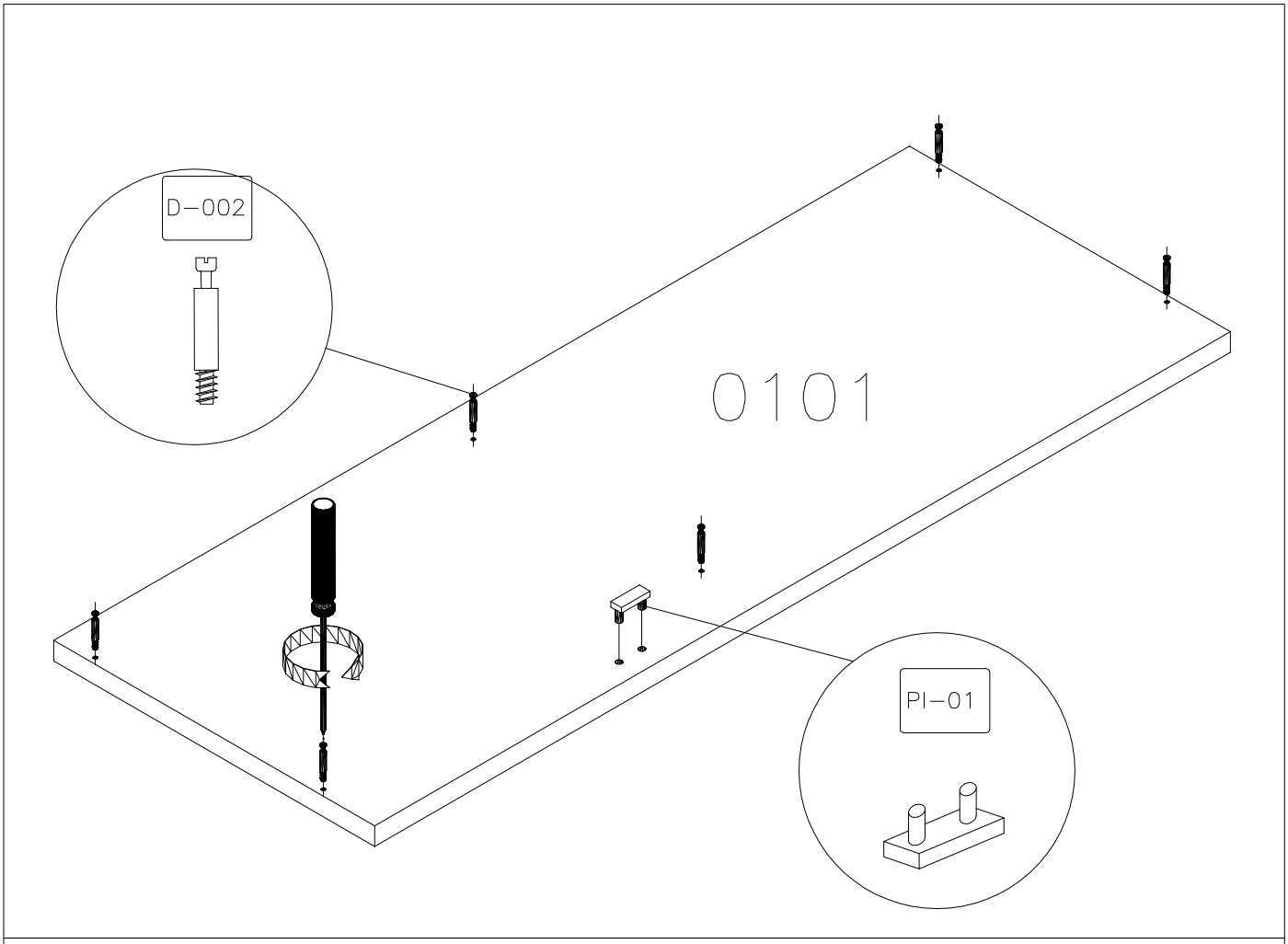
D-002
0101
PI-01

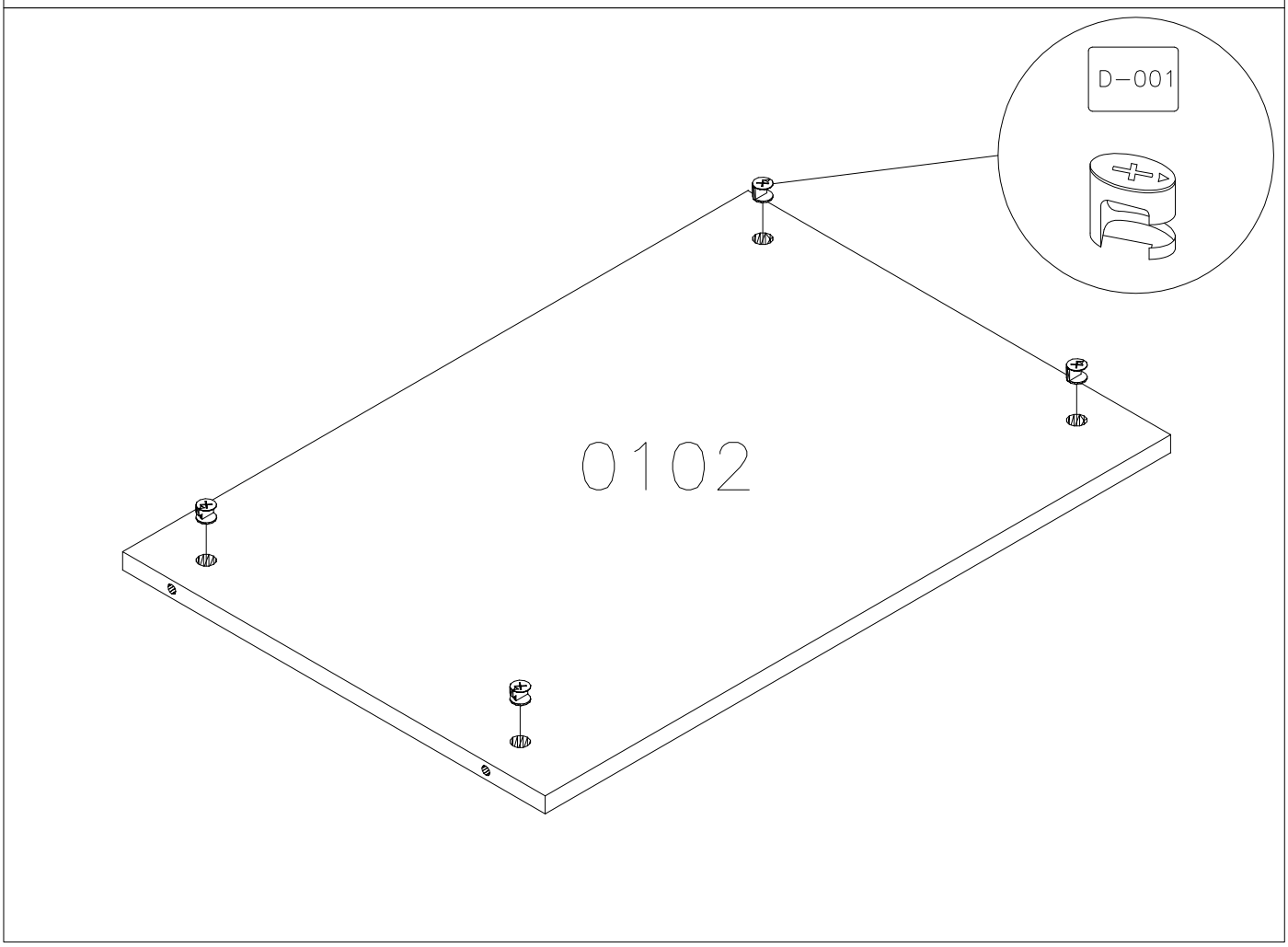
D-001
0102

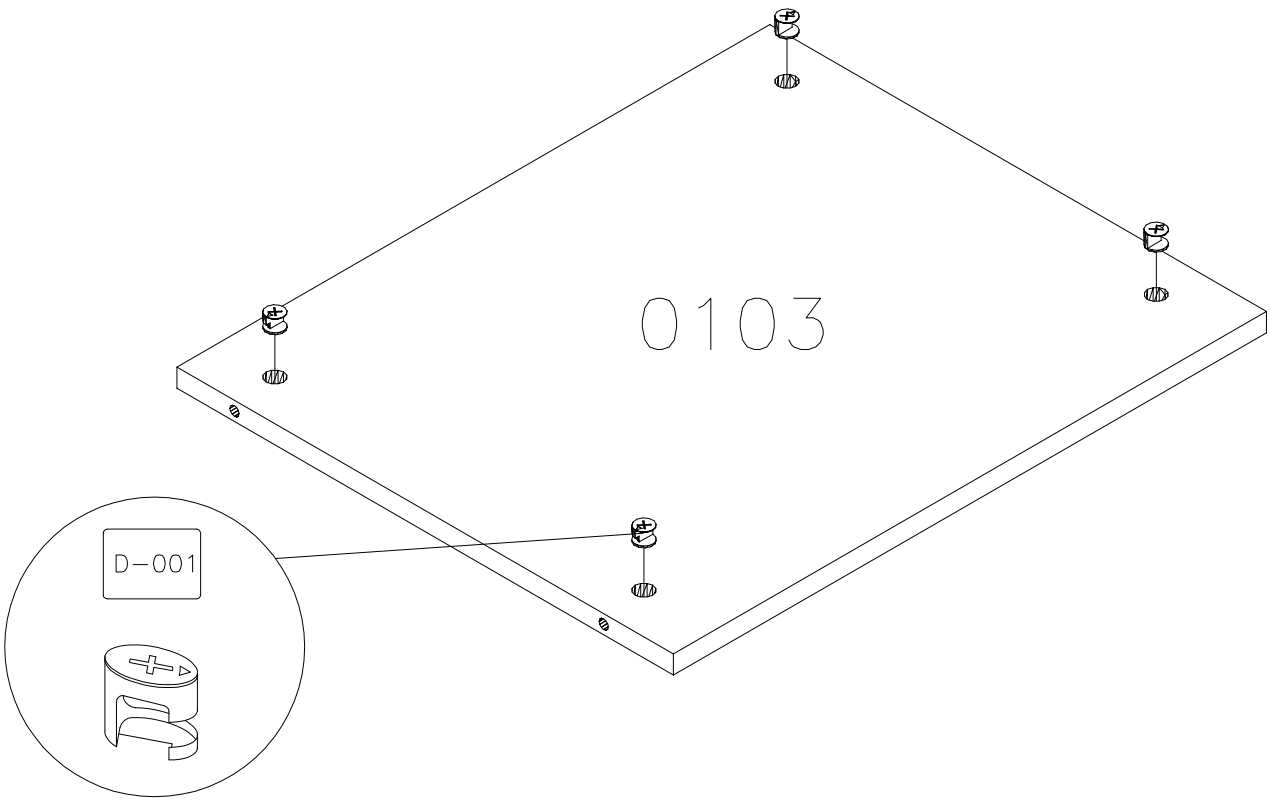
0103
D-001

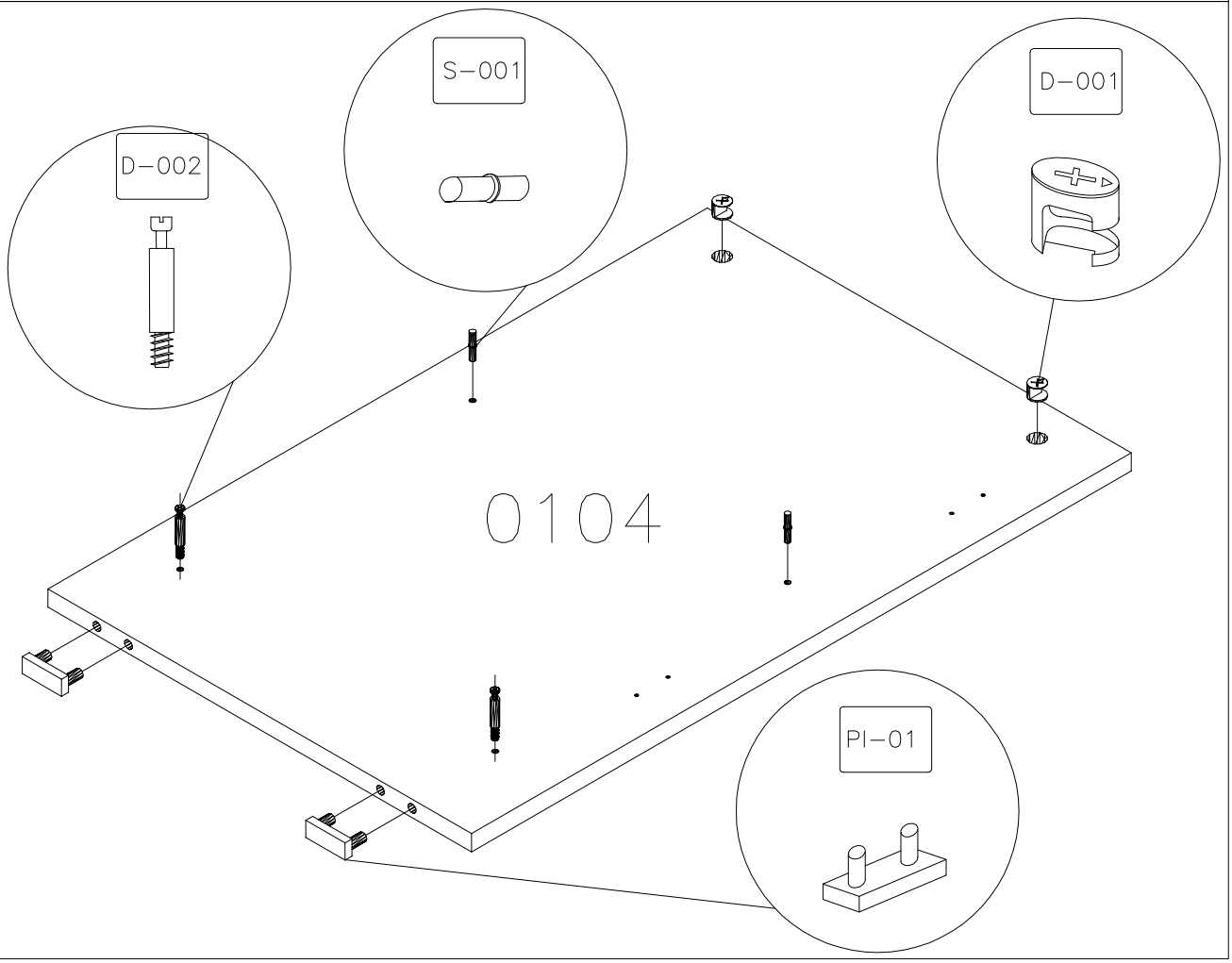
S-001
D-001
D-002
0104
PI-01

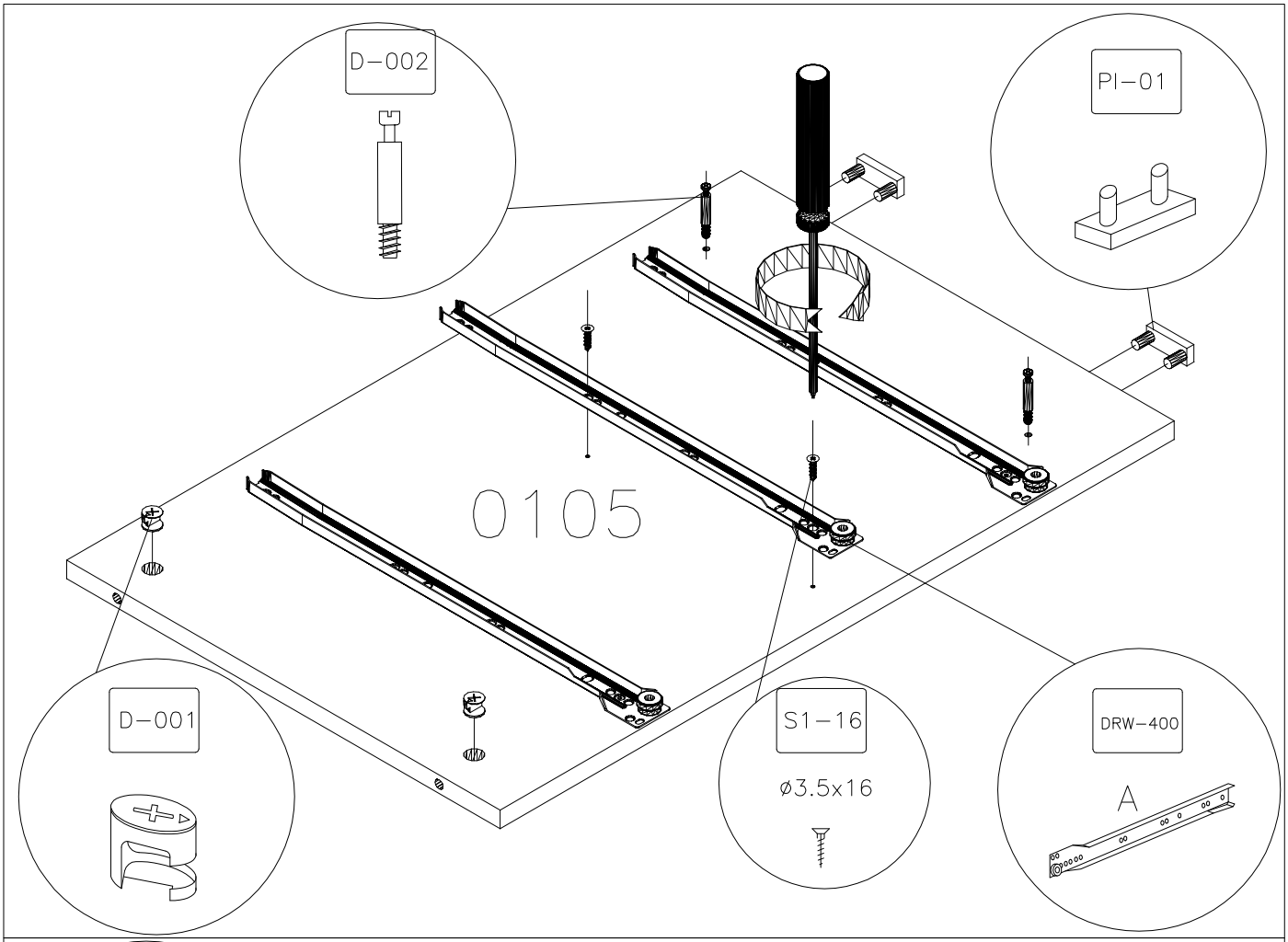
D-002
PI-01
0105
D-001
S1-16
ø3.5x16
DRW-400
A

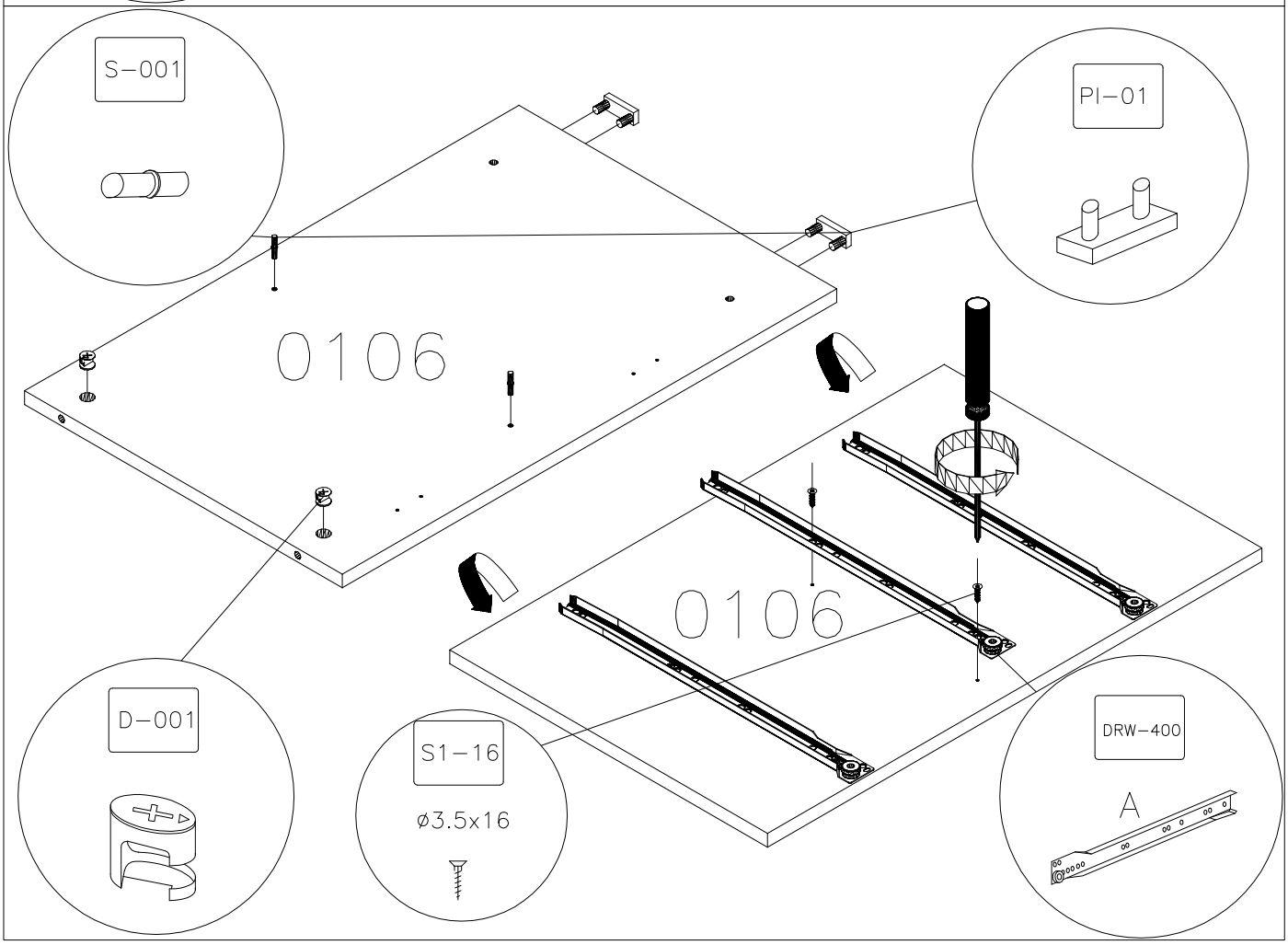
S-001
PI-01
0106
0106
D-001
S1-16
ø3.5x16
DRW-400
A

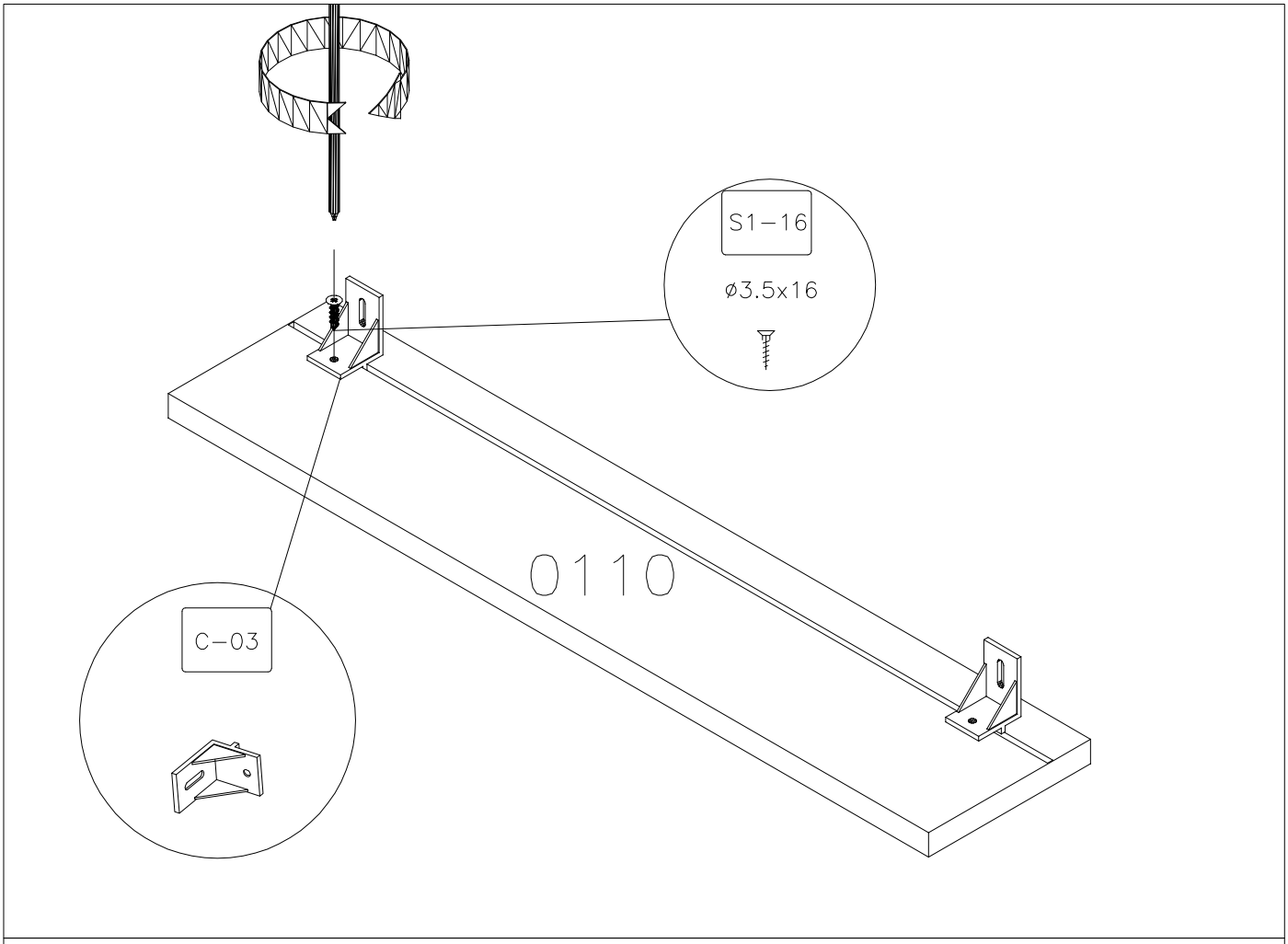
S1-16
ø3.5x16
0110
C-03

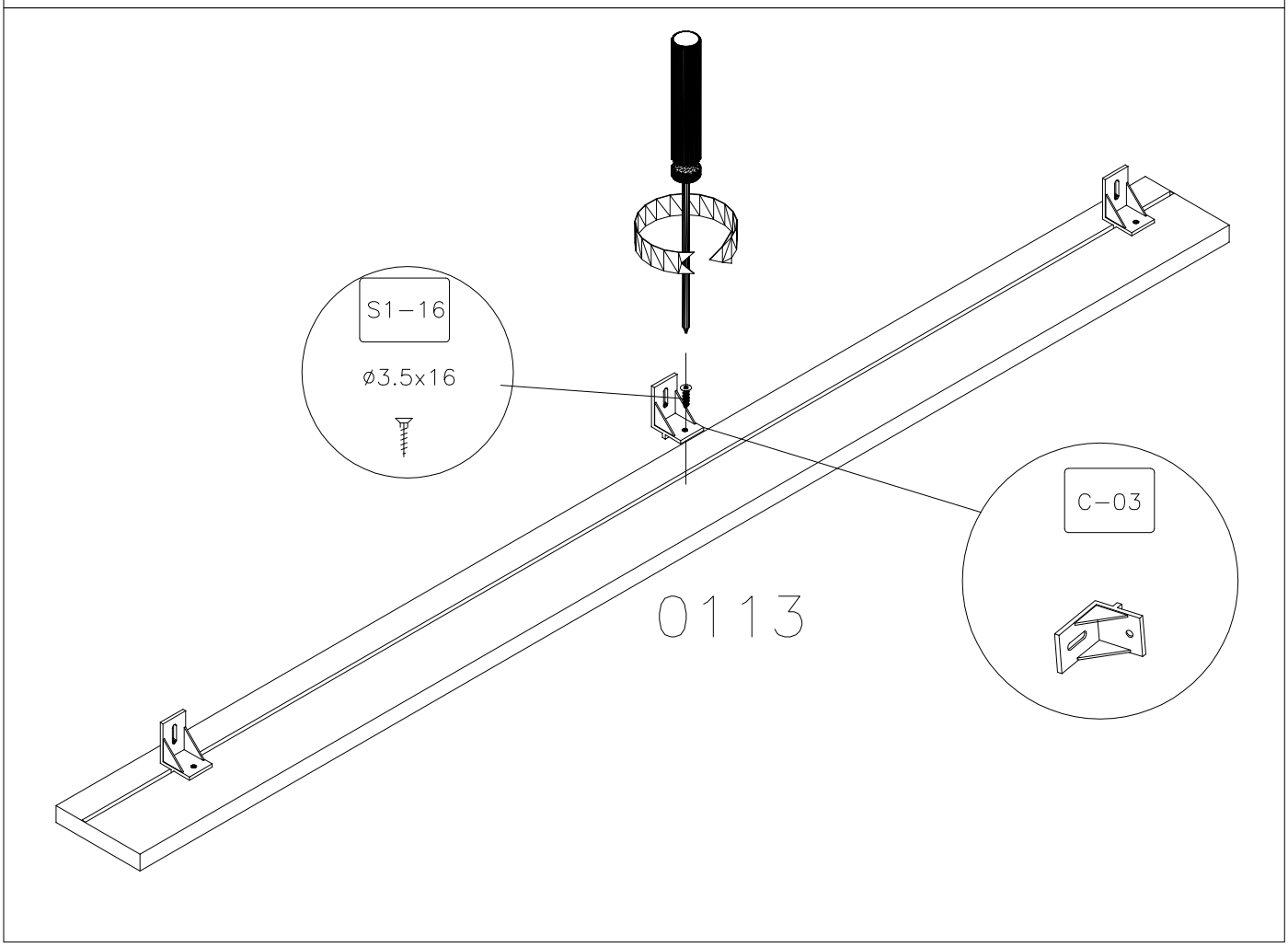
S1-16
ø3.5x16
0113
C-03

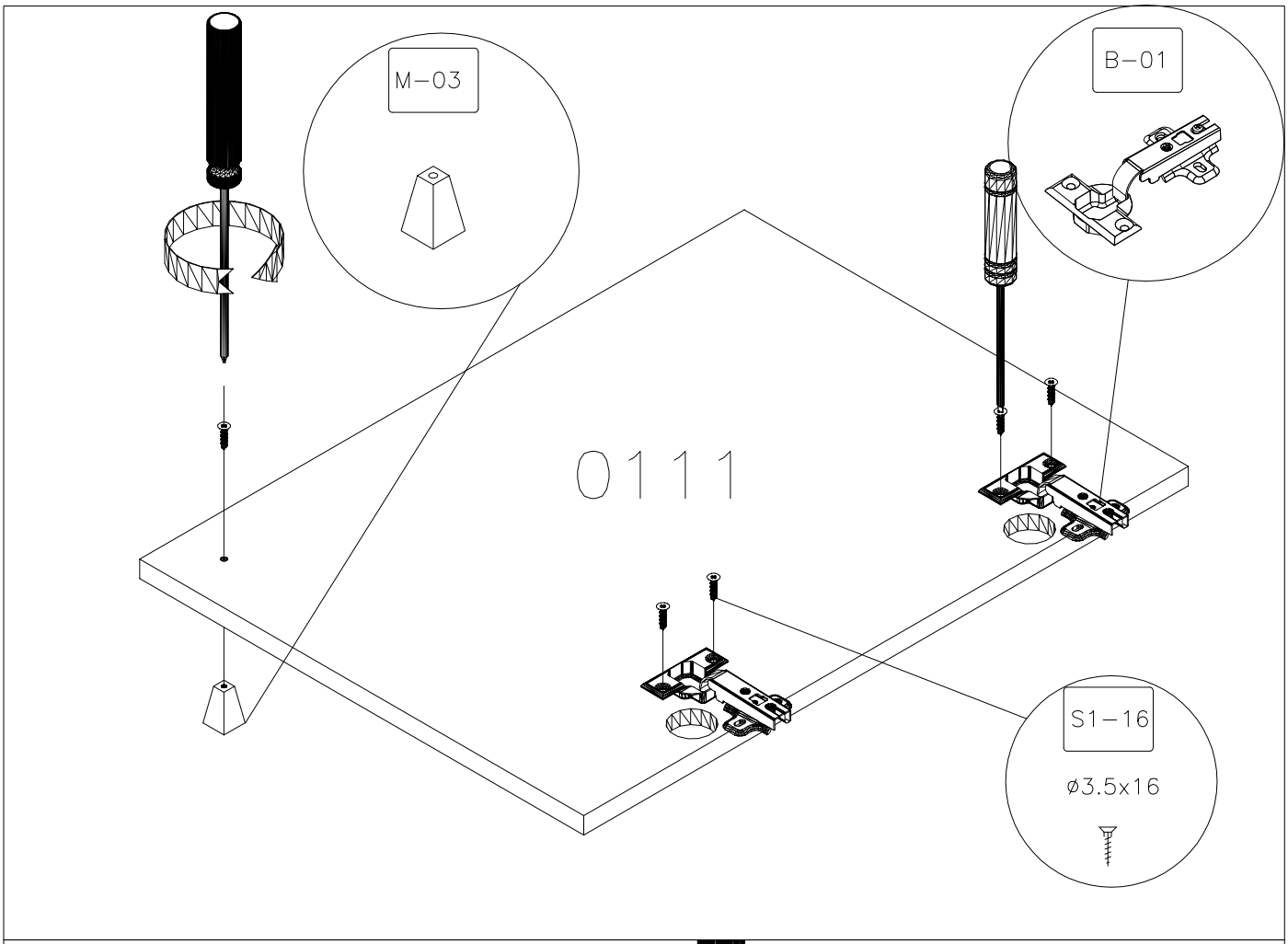
M-03
B-01
0111
S1-16
ø3.5x16

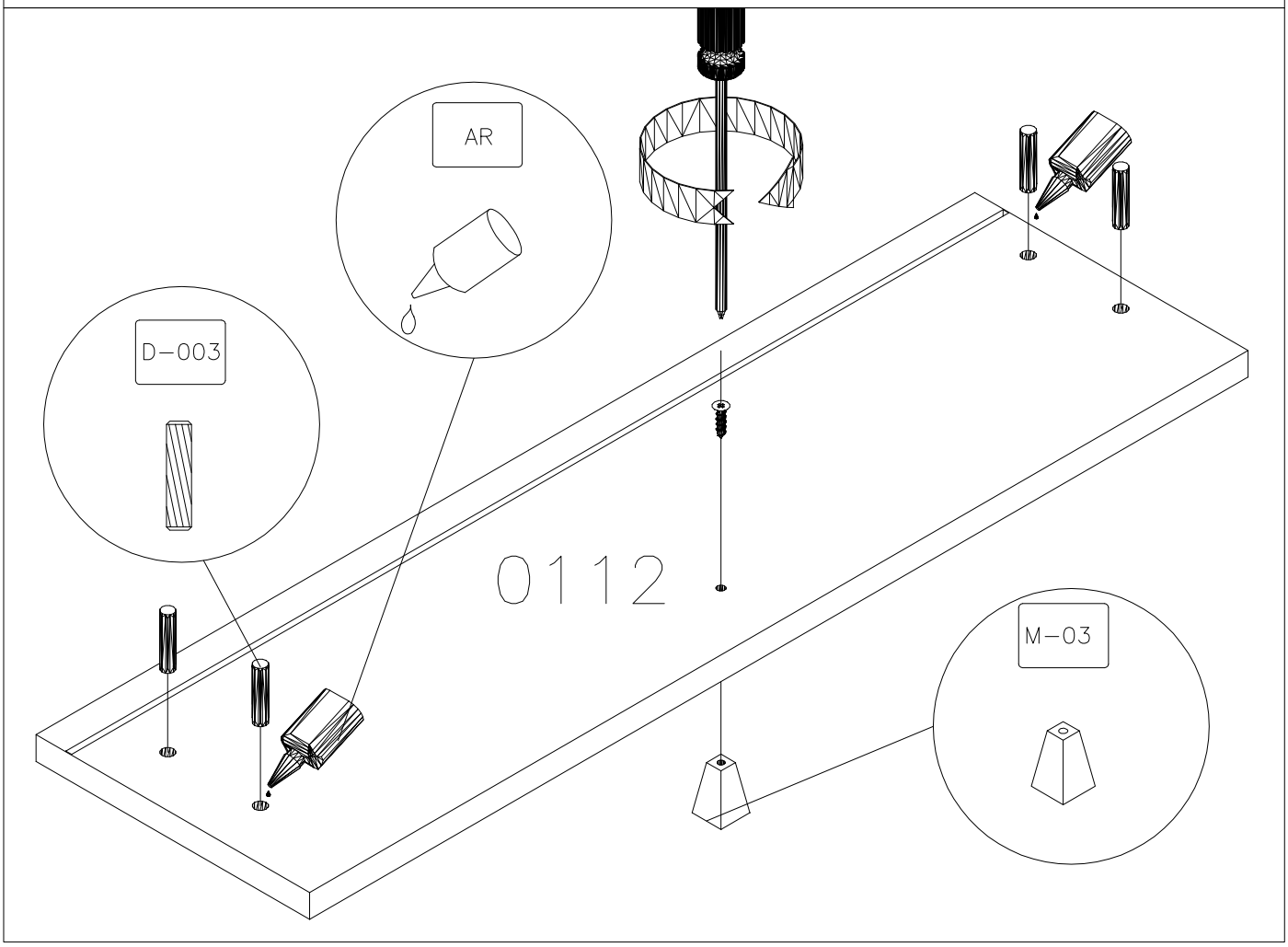
AR
D-003
0112
M-03

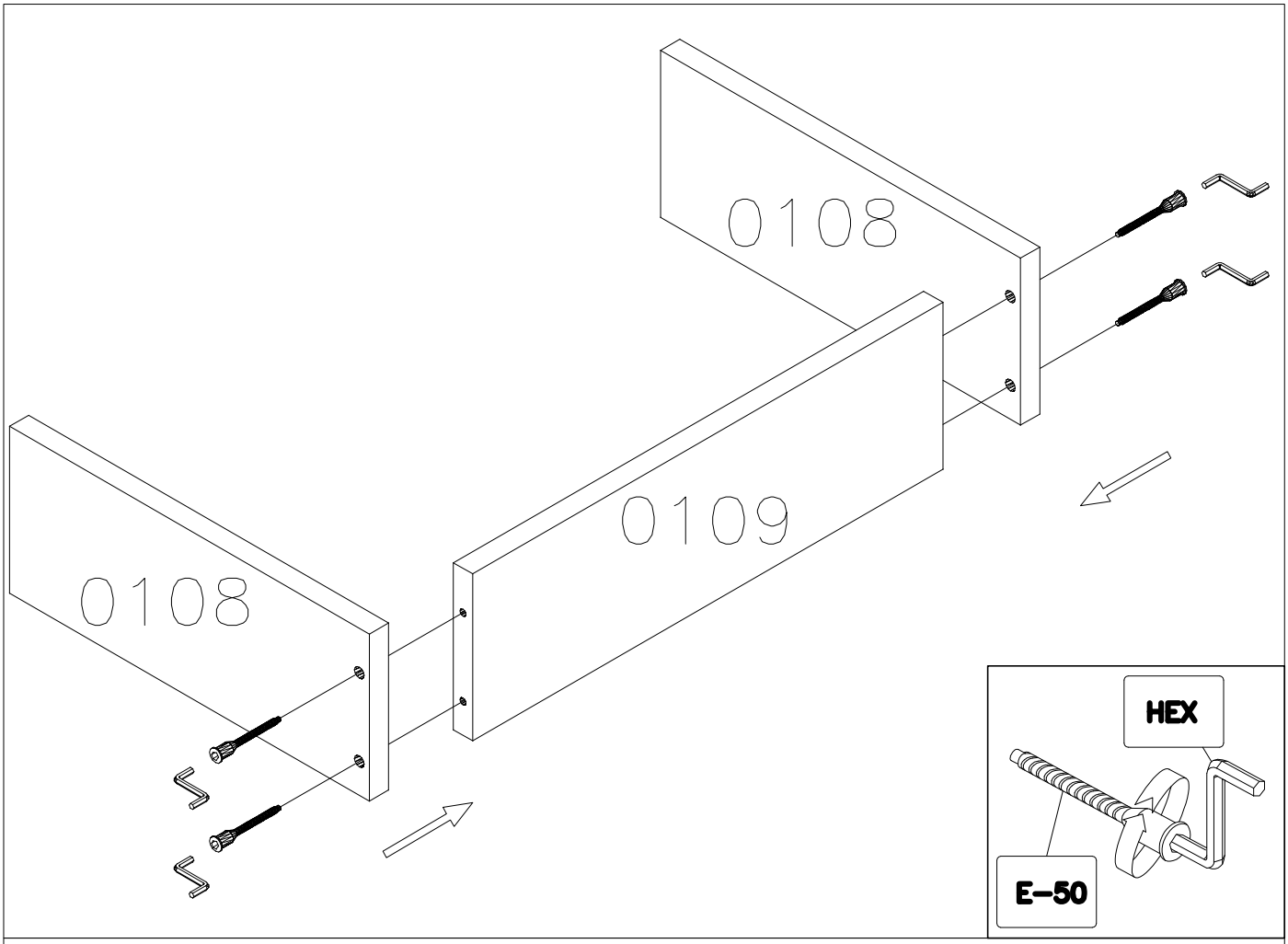
0108
0109
0108
HEX
E-50

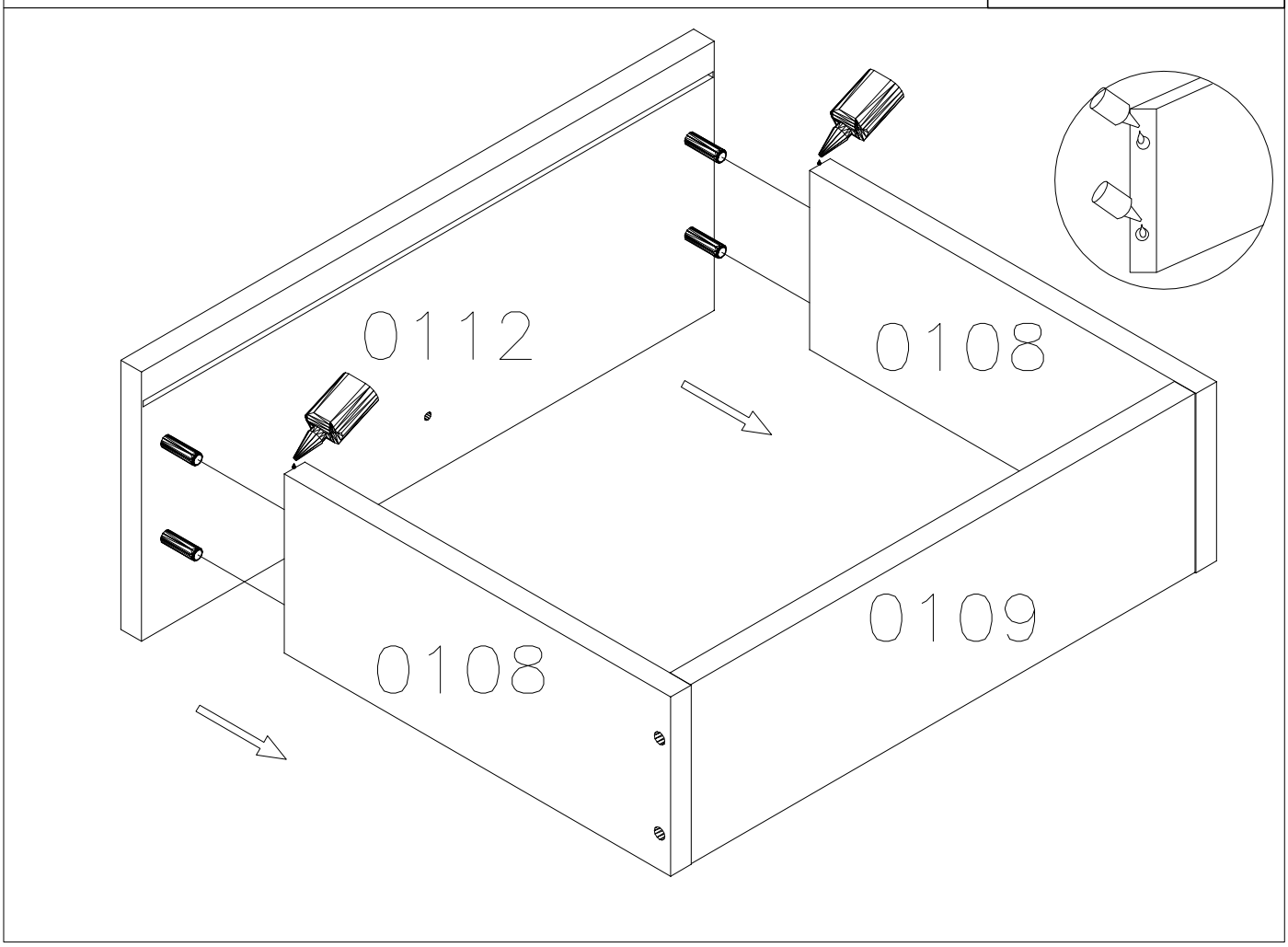
0112
0108
0108
0109

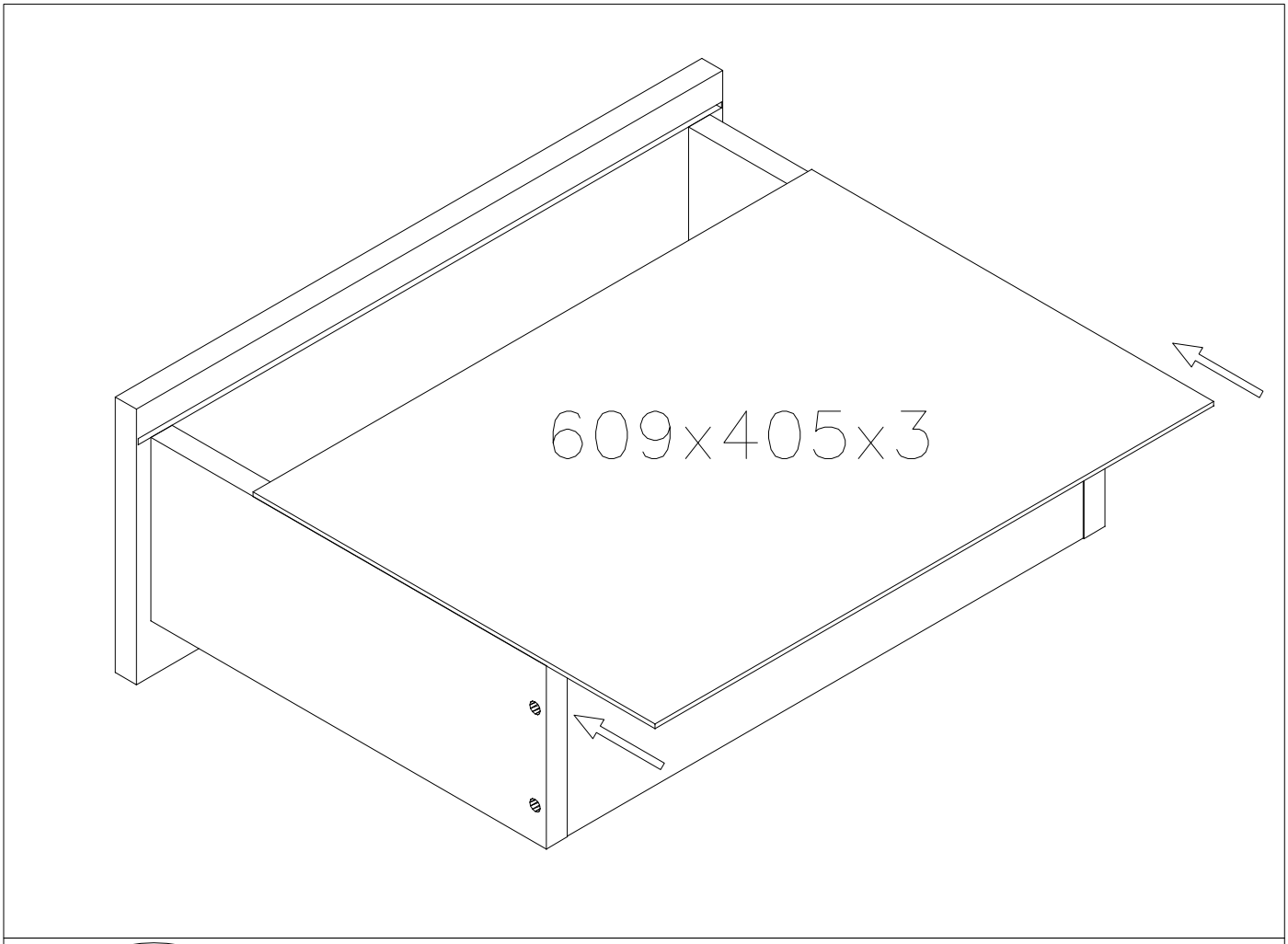
609x405x3

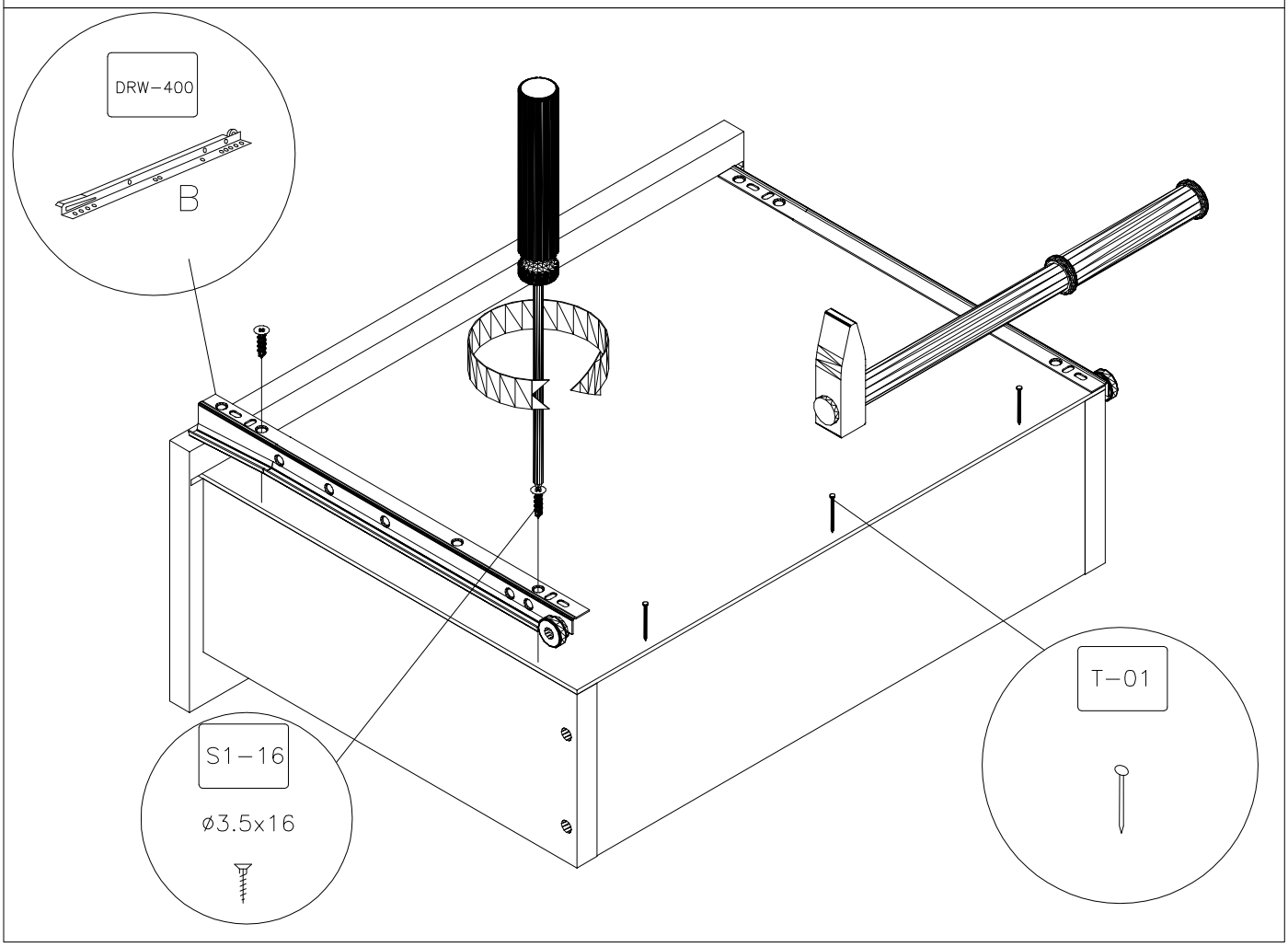
DRW-400
B
S1-16
ø3.5x16
T-01

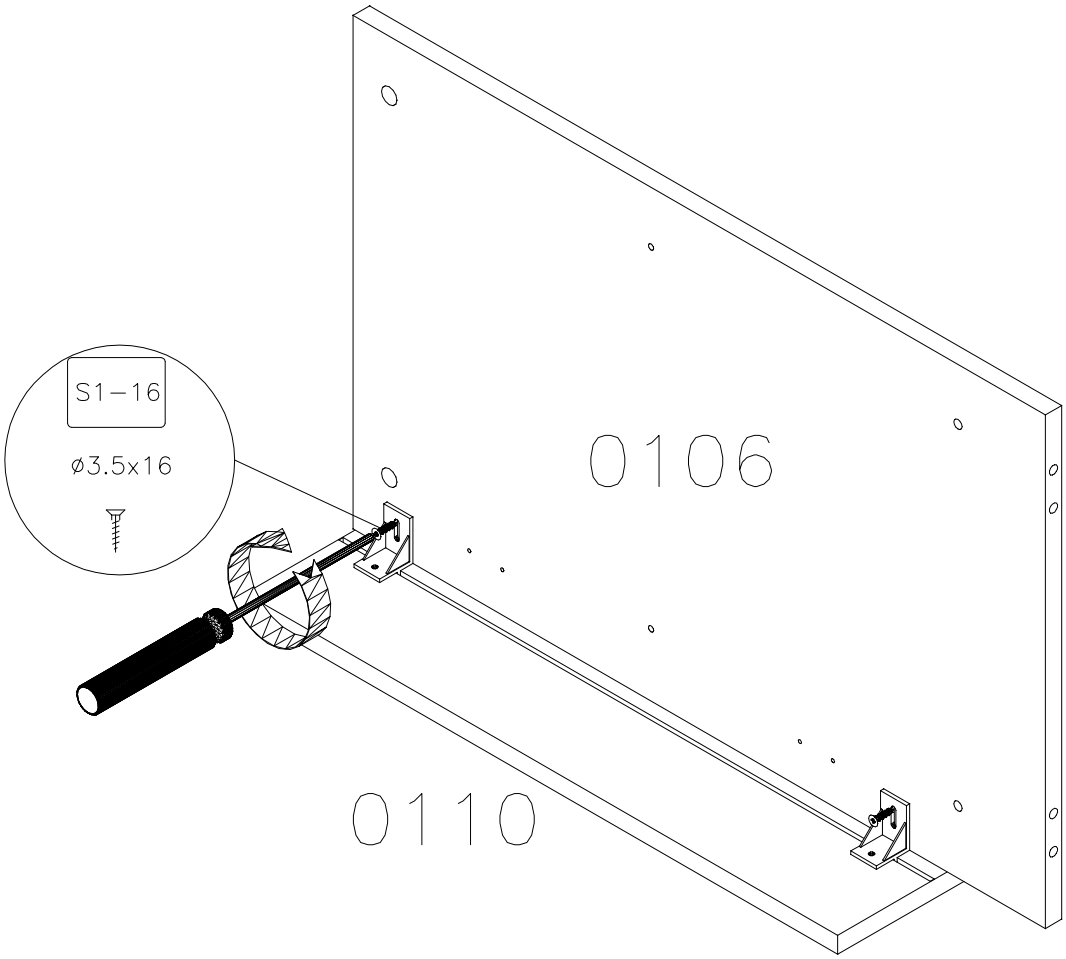
S1-16
ø3.5x16
0106
0110

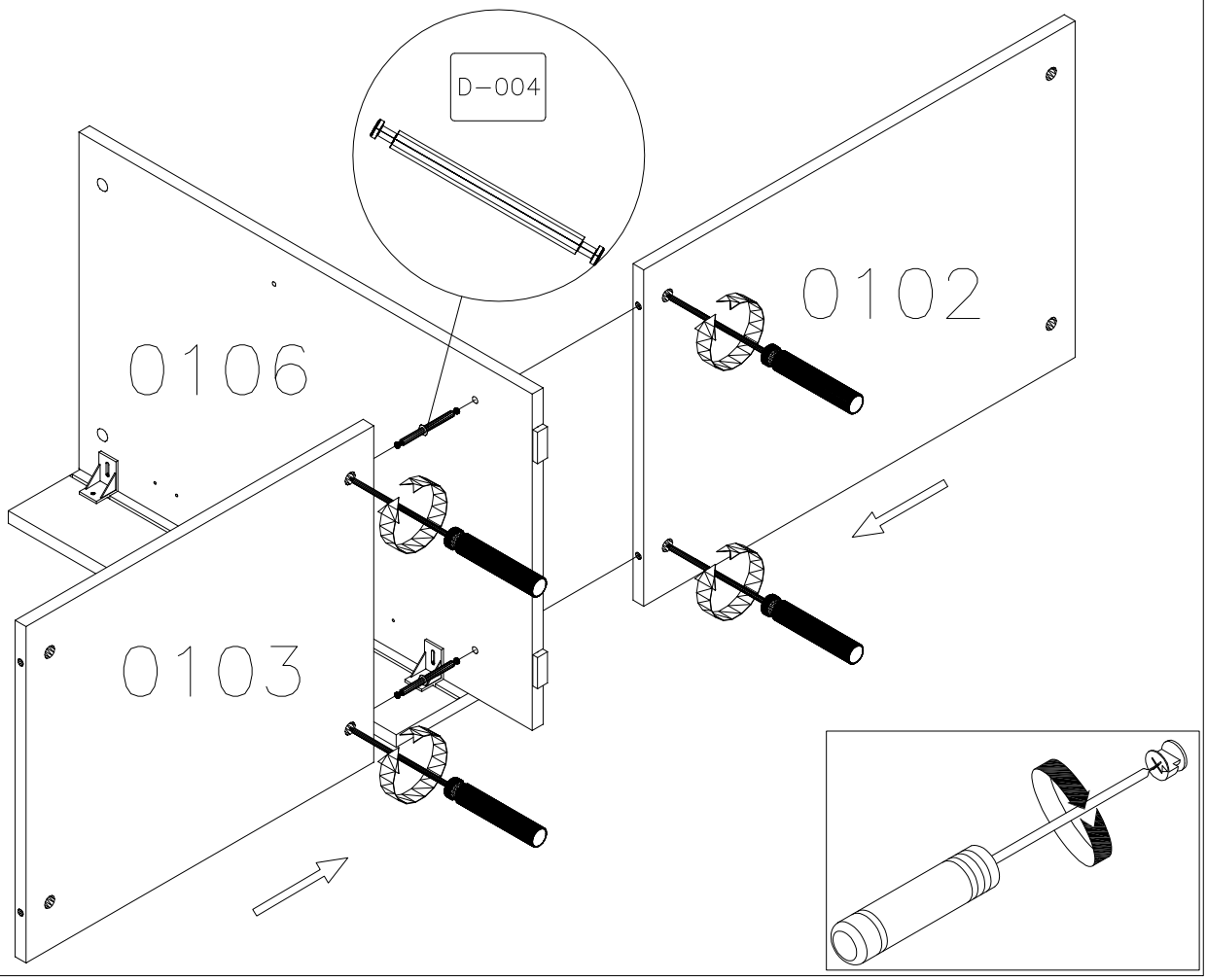
D-004
0106
0102
0103

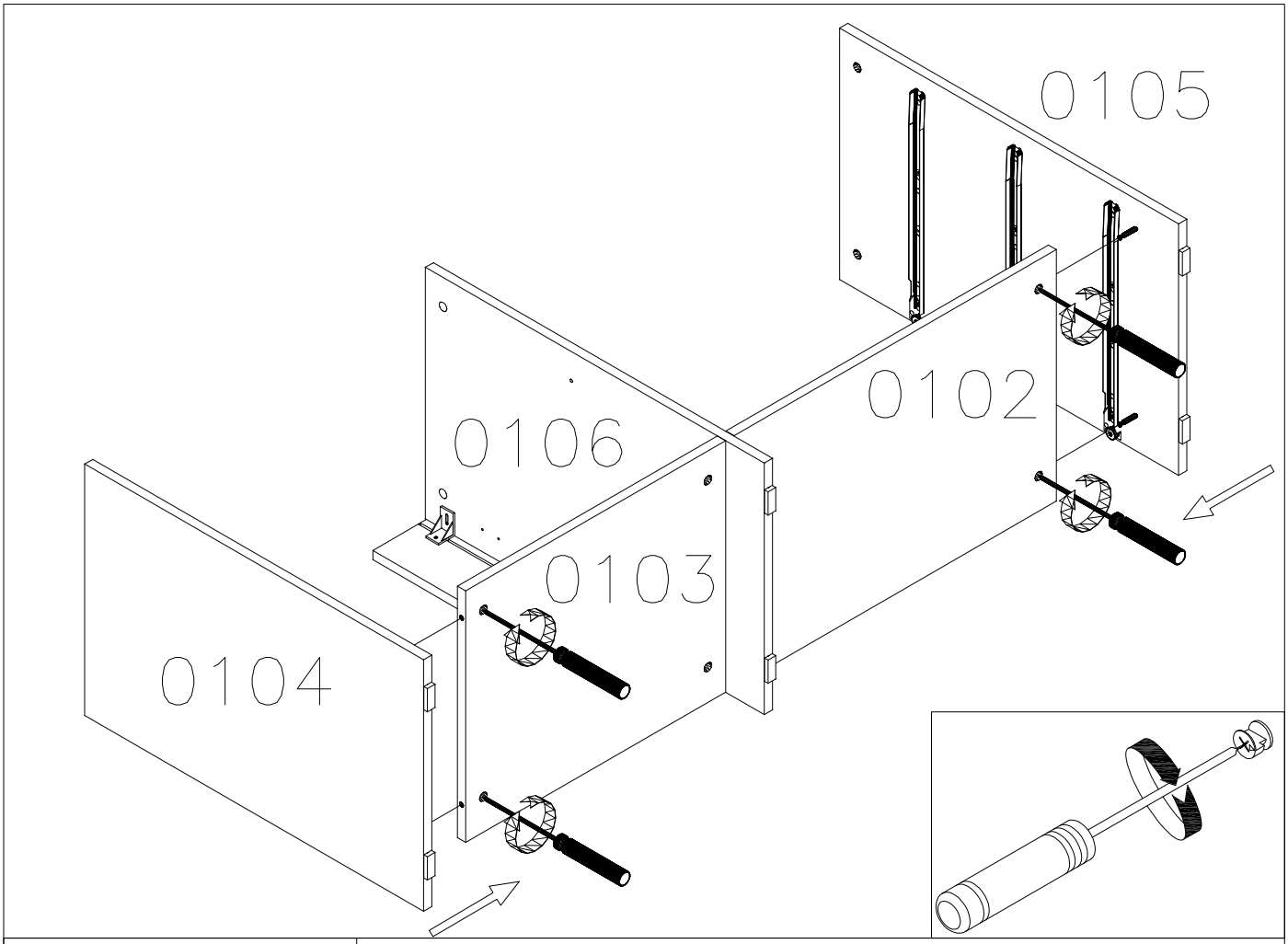
0105
0102
0106
0103
0104

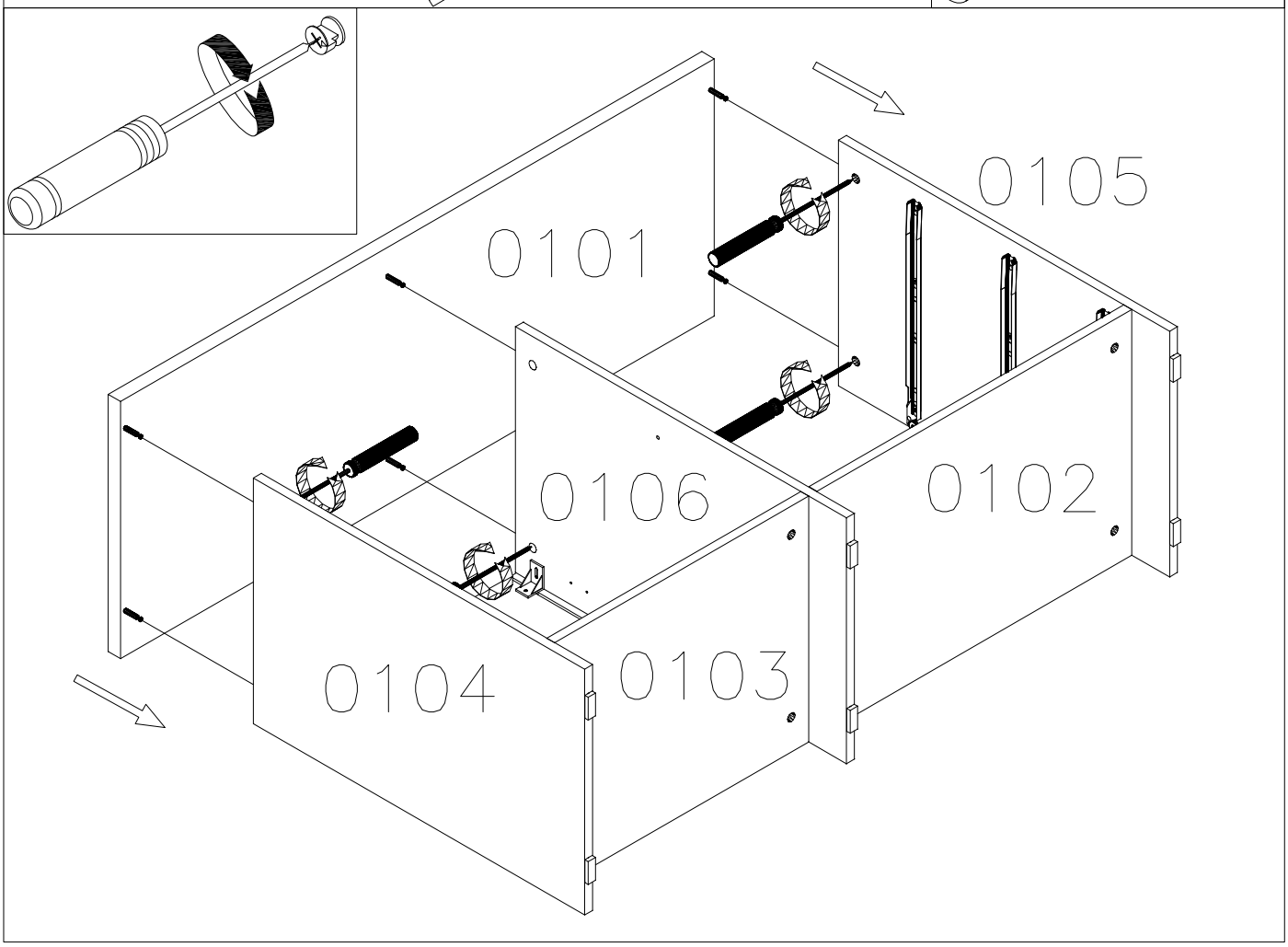
0105
0101
0106
0102
0104
0103

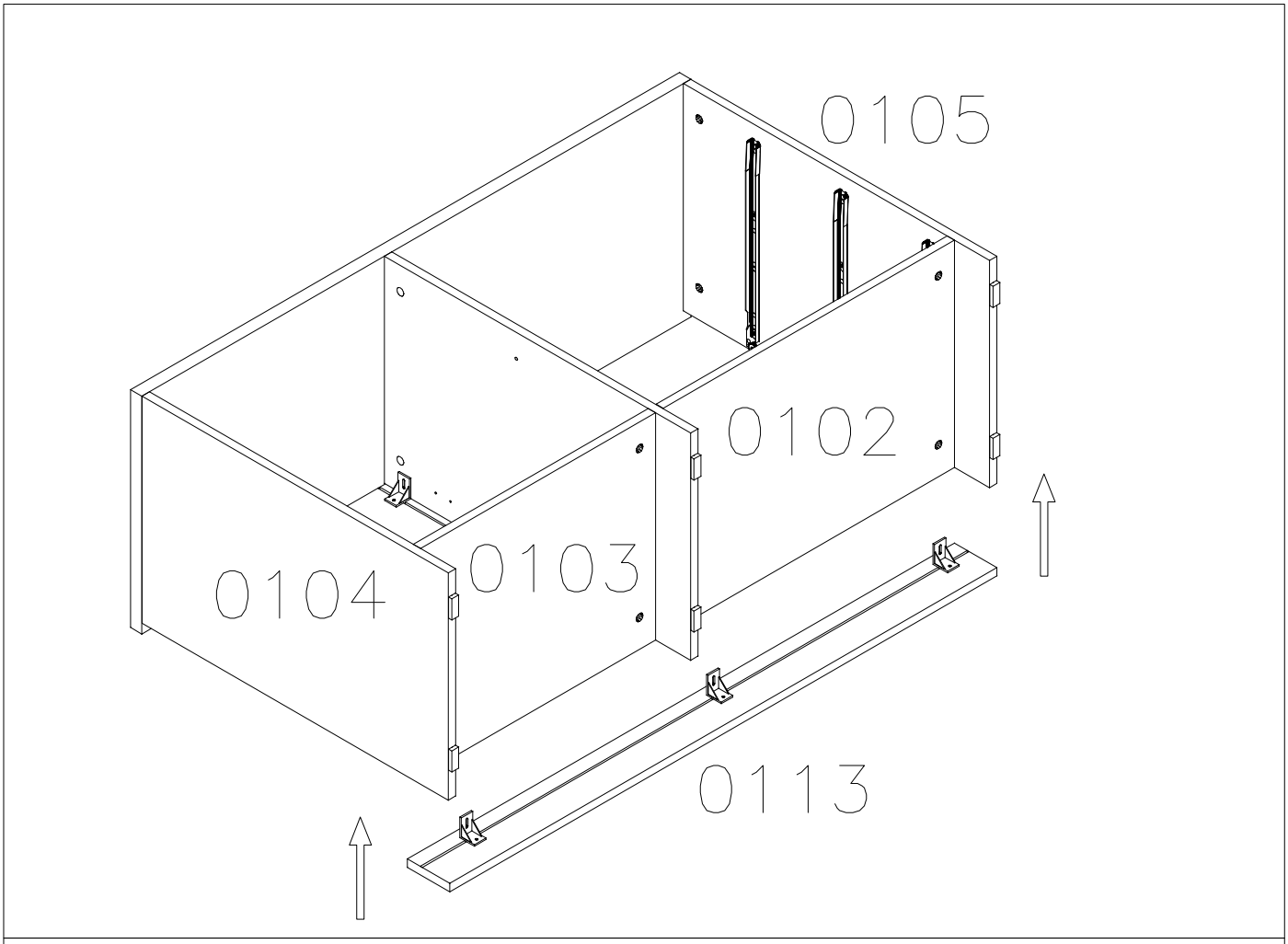
0105
0102
0103
0104
0113

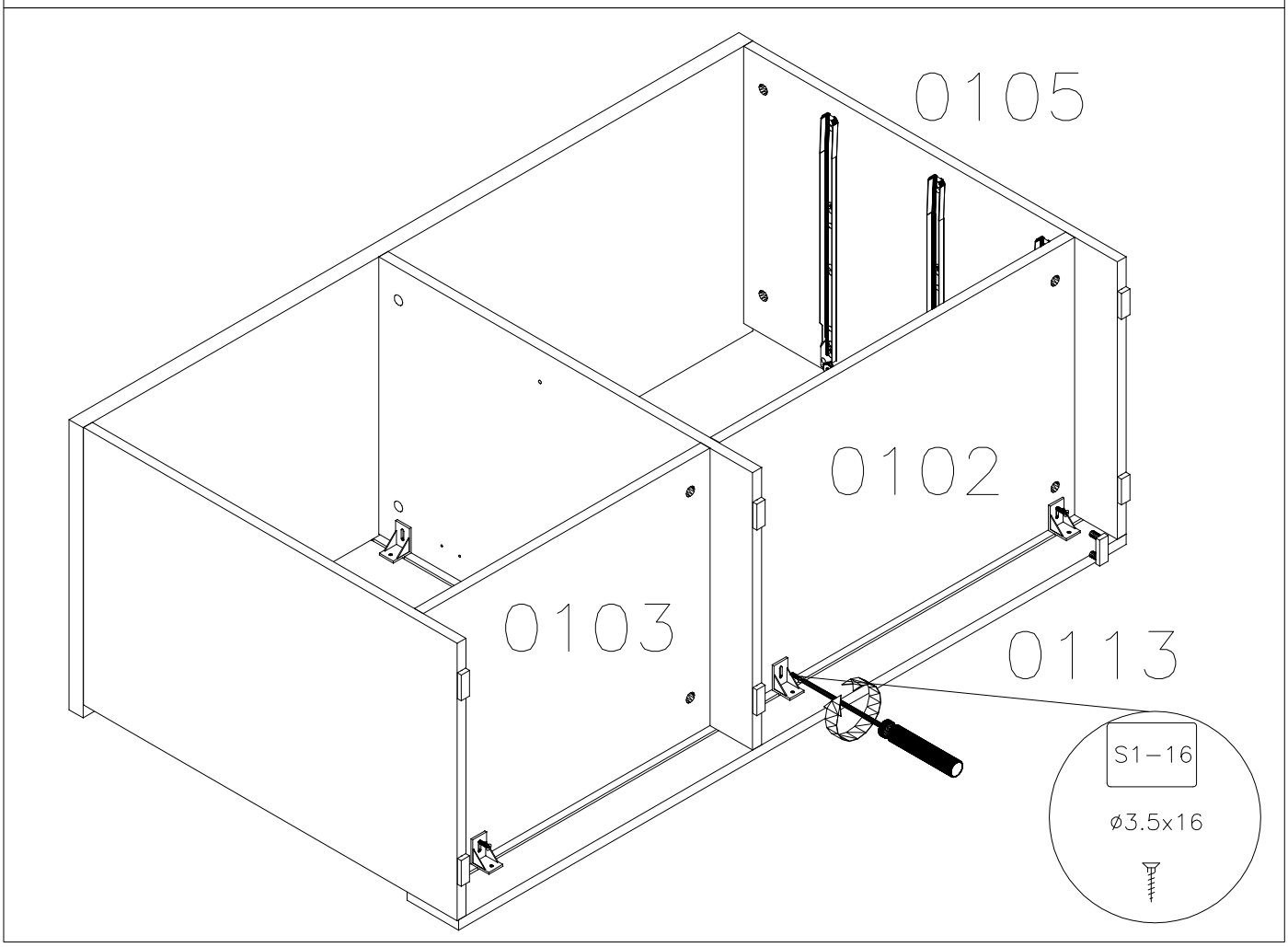
0105
0102
0103
0113
S1-16
ø3.5x16

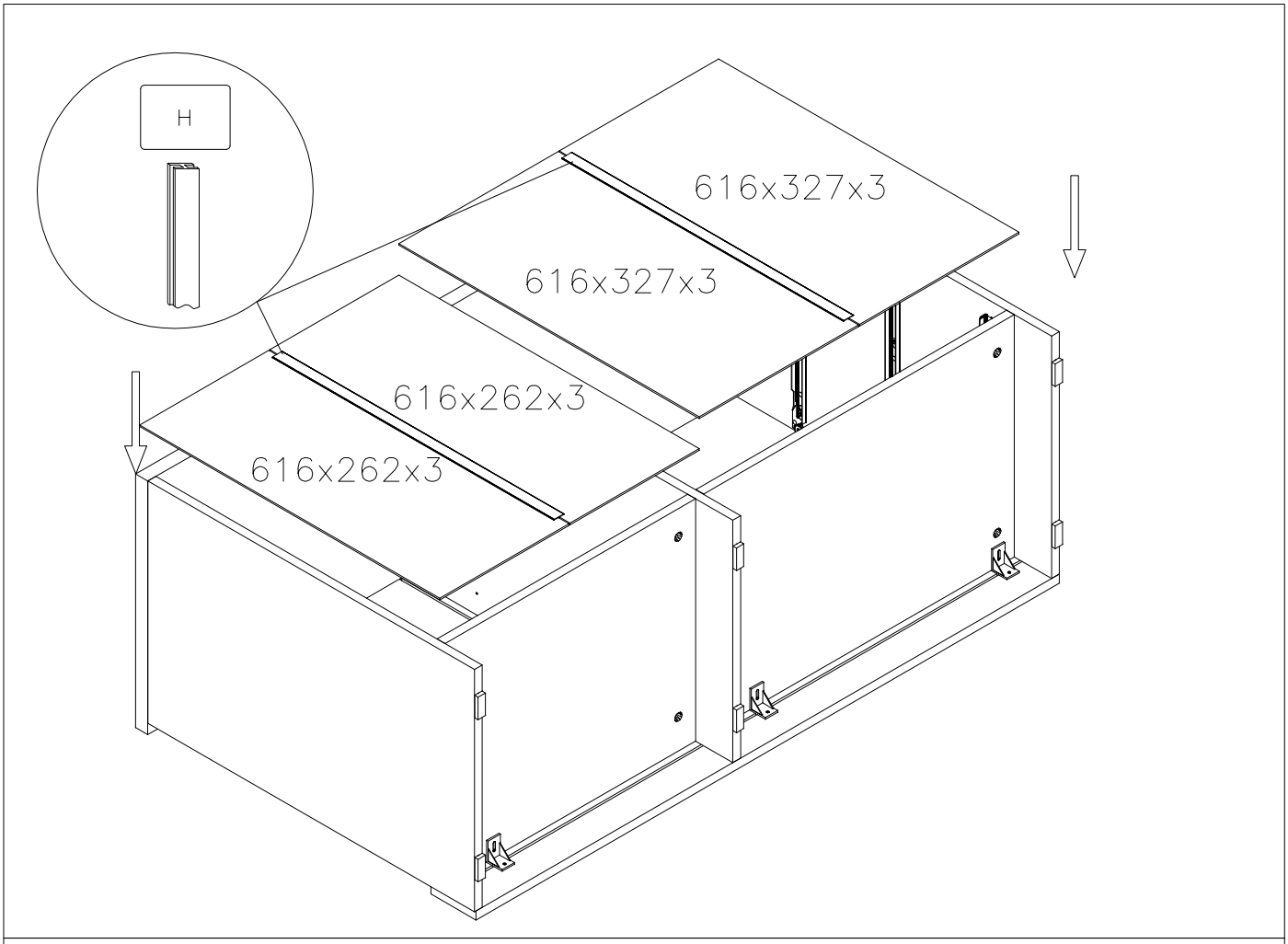
H
616x327x3
616x327x3
616x262x3
616x262x3

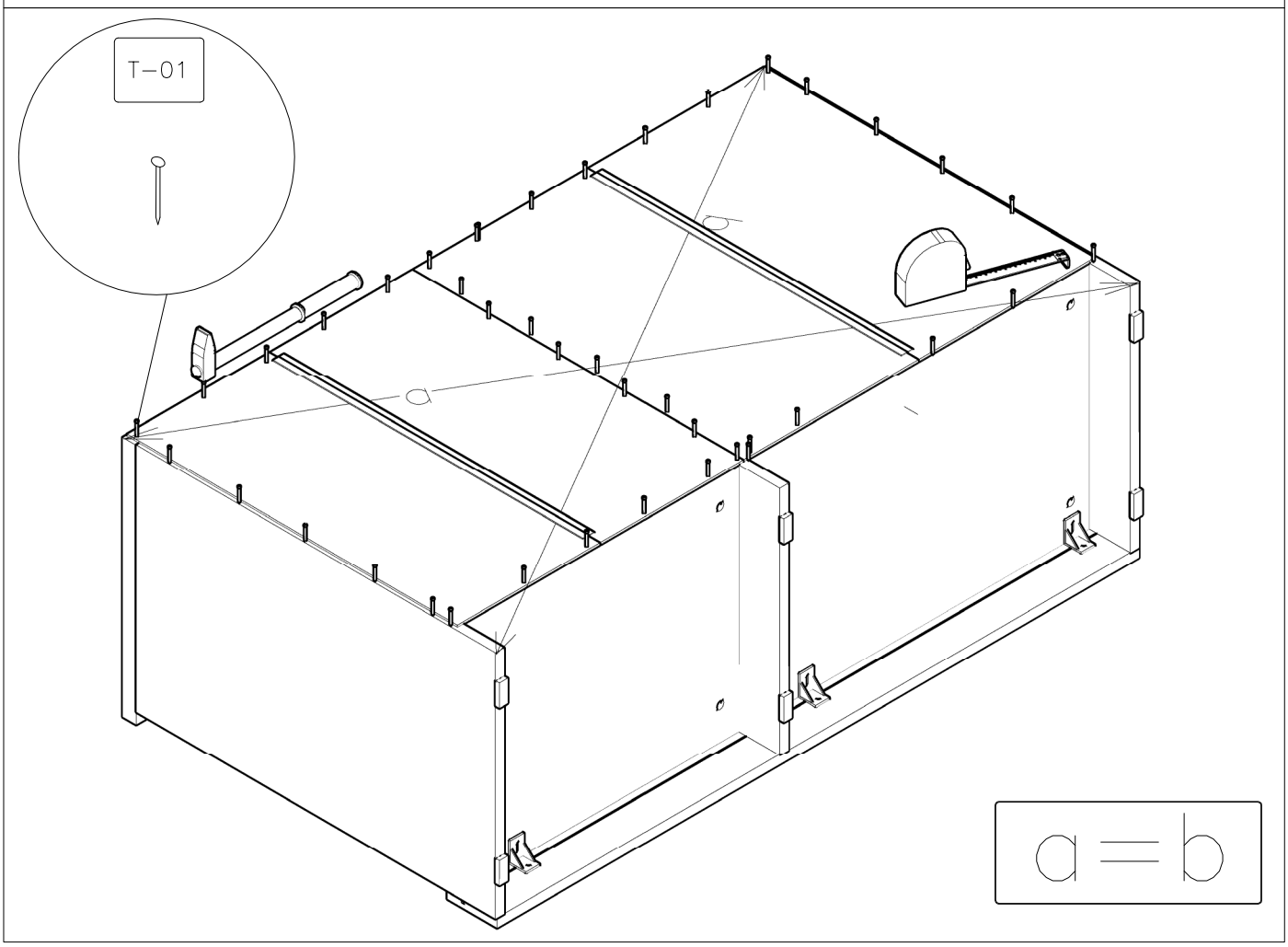
T-01
a
b
a=b

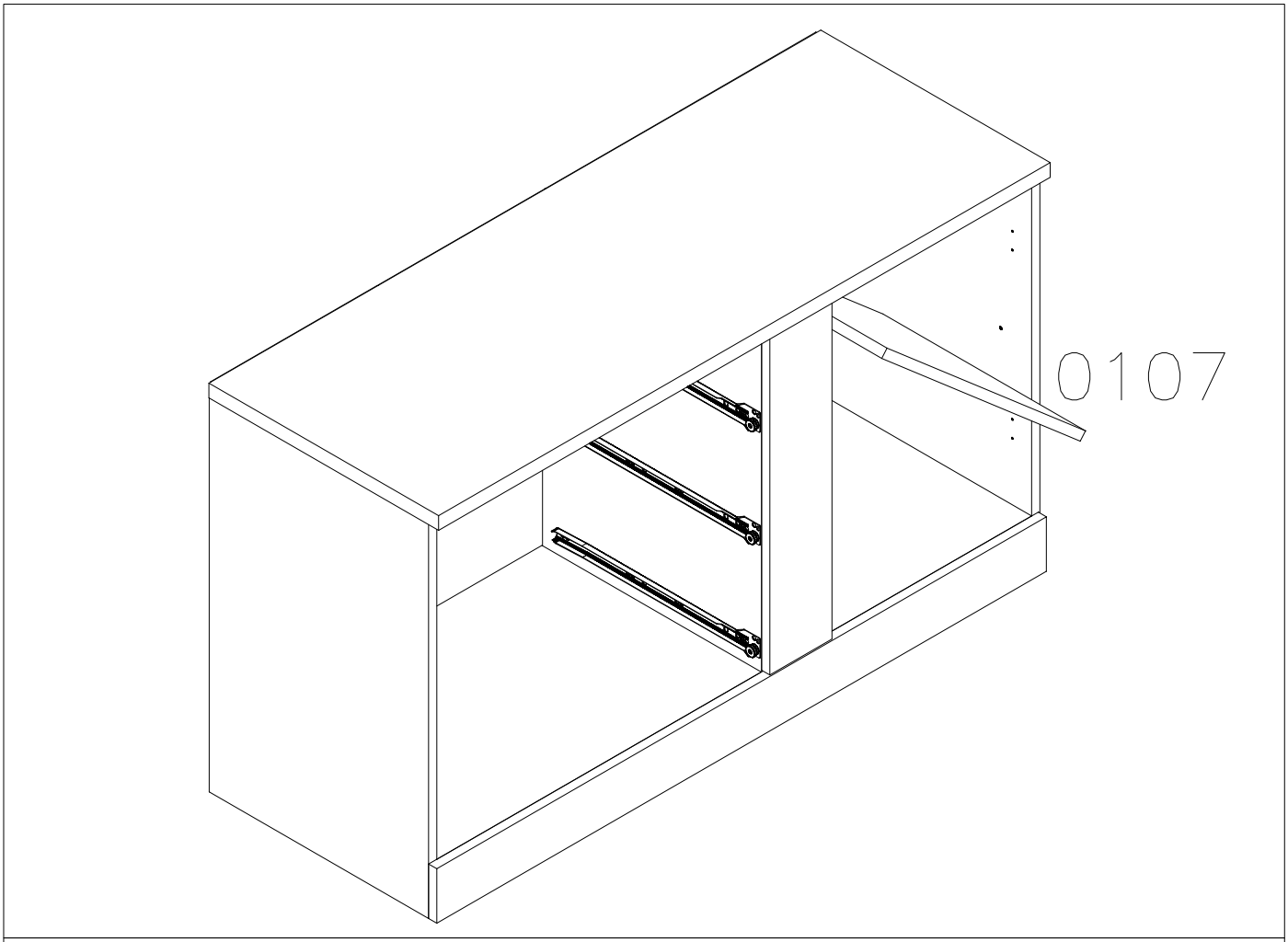
0107

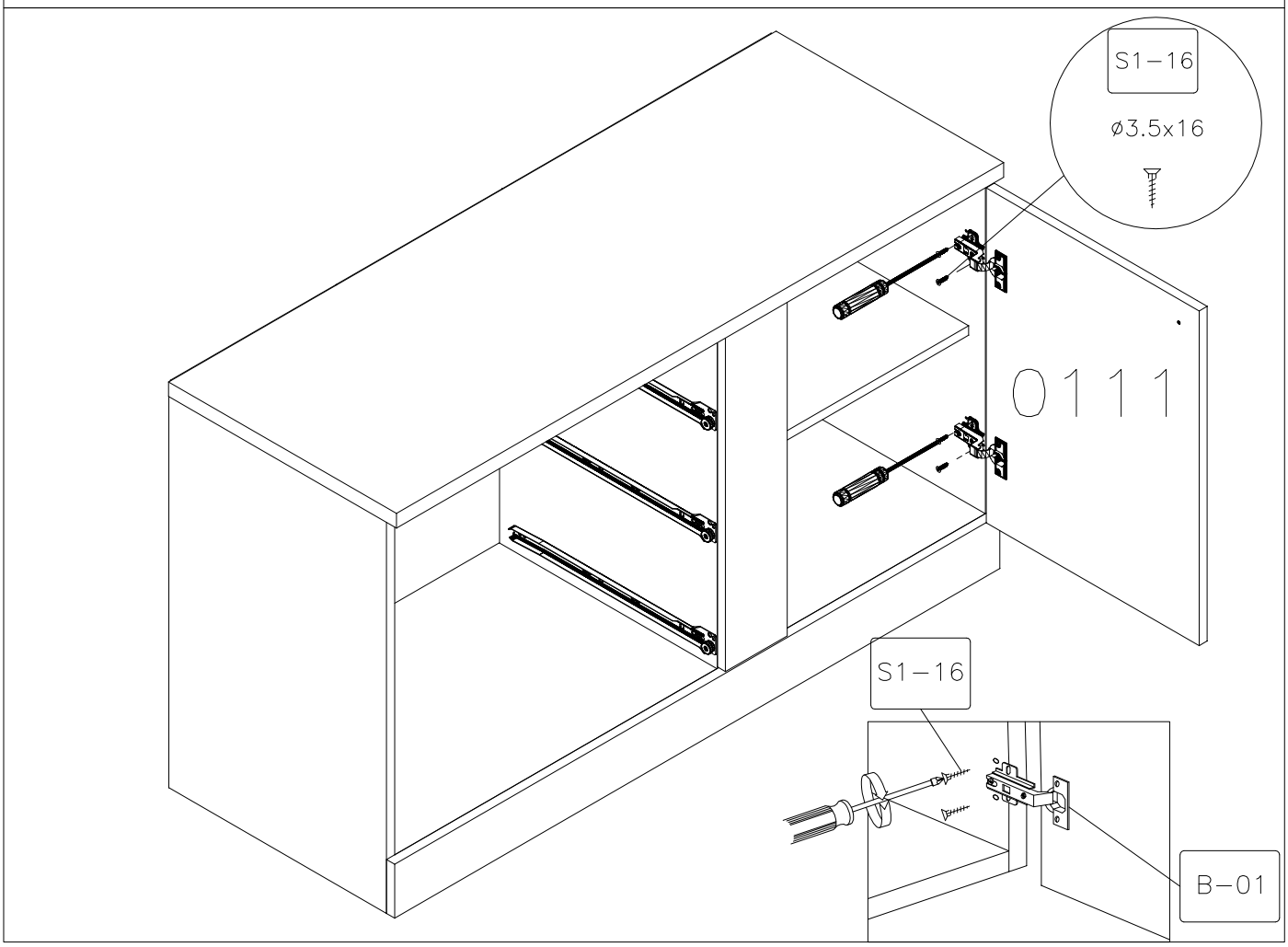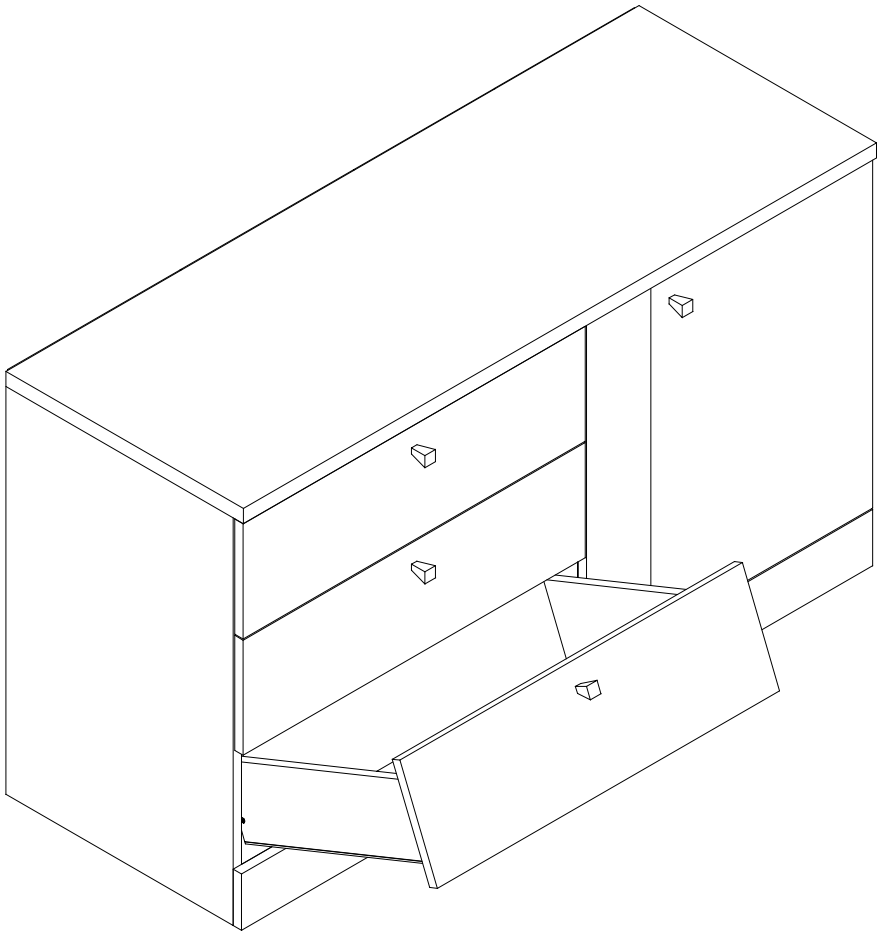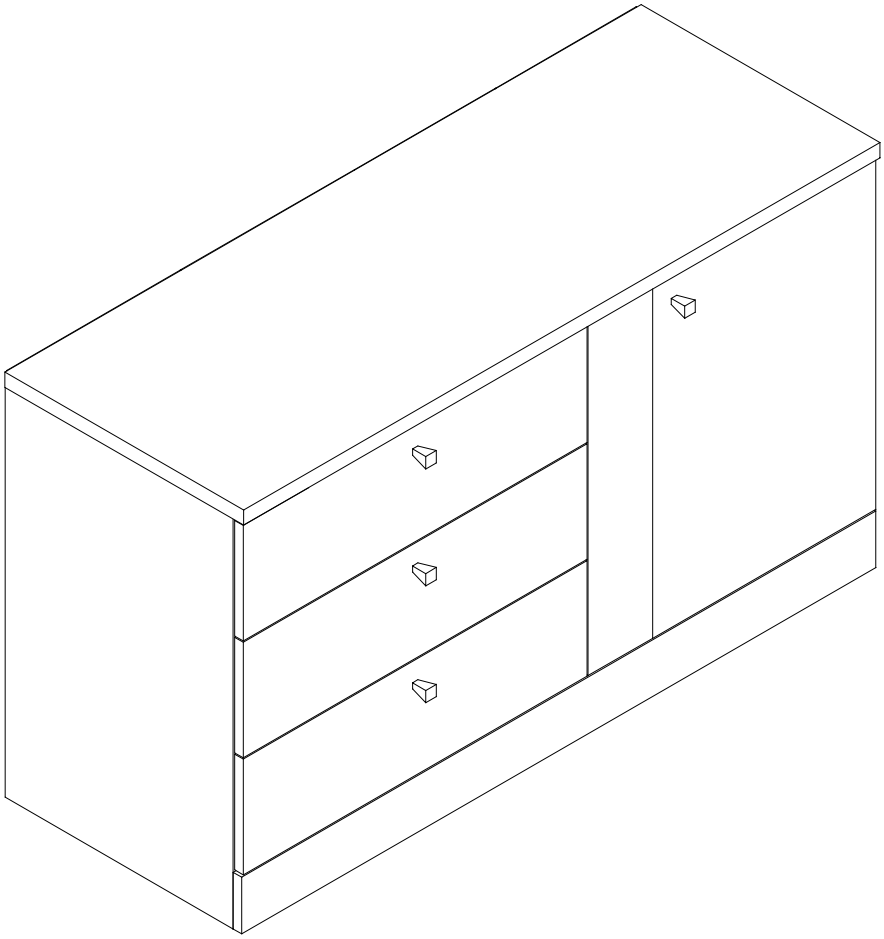
S1-16
ø3.5x16
0111
S1-16
B-01